Paper 49

Proceedings of the Eleventh International Conference
on Computational Structures Technology,
B.H.V. Topping, (Editor),
Civil-Comp Press, Stirlingshire, Scotland

A Finite Element Model for Analysis of Laminated Soft Core Sandwich Structures

A.L. Araújo, C.M. Mota Soares and C.A. Mota Soares
IDMEC/IST - Instituto Superior Tecnico
Technical University of Lisbon, Portugal

Abstract

In this paper a new finite element model for the analysis of sandwich laminated plates with a soft core and composite laminated face layers is presented. The model is formulated using a mixed *layerwise* approach, by considering a higher order shear deformation theory (HSDT) to represent the displacement field of the compressible core and a first order shear deformation theory (FSDT) for the displacement field of the adjacent laminated face layers. The model is validated for free vibrations with results from the literature and the effect of the core transverse compressibility is assessed on modal damping.

Keywords: sandwich structures, composite laminates, finite element modelling, core compressibility.

1 Introduction

Passive damping treatments are widely used in engineering applications in order to reduce vibration and noise radiation [1, 2]. The theoretical work on constrained layer damping can be traced to DiTaranto [3] and Mead and Markus [4] for the axial and bending vibration of sandwich beams. Since then, different formulations and techniques have been reported for modelling and predicting the energy dissipation of the viscoelastic core layer in a vibrating passive constrained layer damping structure [5, 6, 7]. Other proposed formulations include thickness deformation of the core layer dealing with the cases where only a portion of the base structure receives treatment [8].

Sandwich plates with viscoelastic core are very effective in reducing and controlling vibration response of lightweight and flexible structures, where the soft core is strongly deformed in shear, due to the adjacent stiff layers. Hence, due to this high

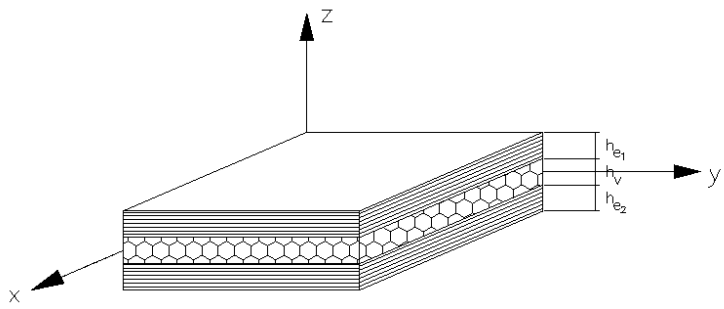

Figure 1: Sandwich plate

shear developed inside the core, equivalent single layer plate theories, even those based on higher order deformations, are not adequate to describe the behaviour of these sandwiches, also due to the high deformation discontinuities that arise at the interfaces between the viscoelastic core material and the surrounding elastic constraining layers. The usual approach to analyse the dynamic response of sandwich plates uses a layered scheme of plate and brick elements with nodal linkage. This approach leads to a time consuming spatial modelling task. To overcome these difficulties, the *layerwise* theory has been considered for constrained viscoelastic treatments, and most recently, Araújo et al. [9, 10] and Moita et al. [11, 12], among others, presented *layerwise* formulations for active sandwich plates with viscoelastic core and piezoelectric sensors and actuators. In these models, the effect of core compressibility is often overlooked. Hence in this paper a generalisation of the element developed by Araújo et al. [9] is presented here for passive damping of soft core sandwich plates, where the transverse compressibility of the core is included [13, 14] The viscoelastic core layer is modelled according to a higher order shear deformation theory, adjacent elastic layers are modelled using the first order shear deformation theory, and all materials are considered to be orthotropic, with elastic layers being formulated as laminated composite plies. Passive damping is dealt with using the complex modulus approach, allowing for frequency dependent viscoelastic materials. The dynamic response of the finite element model is validated using reference solutions from the literature.

2 Sandwich plate model

The development of a *layerwise* finite element model is presented here, to analyse sandwich laminated plates with a viscoelastic (v) core and composite laminated face layers (e_1, e_2), as shown in Figure 1.

The basic assumptions in the development of the sandwich plate model are:

1. The origin of the z axis is the medium plane of the core layer;

2. No slip occurs at the interfaces between layers;

3. The displacement is C^0 along the interfaces;

4. Elastic layers are modelled with first order shear deformation theory (FSDT) and viscoelastic core with a higher order shear deformation theory (HSDT);

5. All materials are linear, homogeneous and orthotropic and the elastic layers (e_1) and (e_2) are made of laminated composite materials;

6. For the viscoelastic core, material properties are complex and frequency dependent.

The FSDT displacement field of the face layers may be written in the general form:

$$\begin{aligned} u^i(x,y,z,t) &= u_0^i(x,y,t) + (z - z_i)\theta_x^i(x,y,t) \\ v^i(x,y,z,t) &= v_0^i(x,y,t) + (z - z_i)\theta_y^i(x,y,t) \\ w^i(x,y,z,t) &= w_0^i(x,y,t) \end{aligned} \tag{1}$$

where u_0^i and v_0^i are the in-plane displacements of the mid-plane of the layer, θ_x^i and θ_y^i are rotations of normals to the mid-plane about the y axis (anticlockwise) and x axis (clockwise), respectively, w_0^i is the transverse displacement of the layer, z_i is the z coordinate of the mid-plane of each layer, with reference to the core layer mid-plane ($z = 0$), and $i = e_1, e_2$ is the layer index.

For the viscoelastic core layer, the HSDT displacement field is written as a second order Taylor series expansion of the displacements in the thickness coordinate:

$$\begin{aligned} u^v(x,y,z,t) &= u_0^v(x,y,t) + z\theta_x^v(x,y,t) + z^2 u_0^{*v}(x,y,t) + z^3\theta_x^{*v}(x,y,t) \\ v^v(x,y,z,t) &= v_0^v(x,y,t) + z\theta_y^v(x,y,t) + z^2 v_0^{*v}(x,y,t) + z^3\theta_y^{*v}(x,y,t) \\ w^v(x,y,z,t) &= w_0^v(x,y,t) + z\theta_z^v(x,y,t) + z^2 w_0^{*v}(x,y,t) \end{aligned} \tag{2}$$

where u_0^v and v_0^v are the in-plane displacements of the mid-plane of the core, θ_x^v and θ_y^v are rotations of normals to the mid-plane of the core about the y axis (anticlockwise) and x axis (clockwise), respectively, w_0^v is the transverse displacement of the core mid-plane. The functions u_0^{*v}, v_0^{*v}, w_0^{*v}, θ_x^{*v}, θ_y^{*v} and θ_z^v are higher order terms in the series expansion, defined also in the mid-plane of the core layer.

The displacement continuity at the layer interfaces can be written as:

$$
\begin{aligned}
u^v(x,y,\frac{h_v}{2},t) &= u^{e_1}(x,y,\frac{h_v}{2},t)\\
v^v(x,y,\frac{h_v}{2},t) &= v^{e_1}(x,y,\frac{h_v}{2},t)\\
w^v(x,y,\frac{h_v}{2},t) &= w_0^{e_1}\\
u^v(x,y,-\frac{h_v}{2},t) &= u^{e_2}(x,y,-\frac{h_v}{2},t)\\
v^v(x,y,-\frac{h_v}{2},t) &= v^{e_2}(x,y,-\frac{h_v}{2},t)\\
w^v(x,y,-\frac{h_v}{2},t) &= w_0^{e_2}
\end{aligned}
\tag{3}
$$

where the coordinates of layer mid-planes are:

$$
\begin{aligned}
z_{e_1} &= \frac{h_v}{2} + \frac{h_{e_1}}{2}\\
z_v &= 0\\
z_{e_2} &= -\frac{h_v}{2} - \frac{h_{e_2}}{2}
\end{aligned}
\tag{4}
$$

Applying the continuity conditions, one obtains:

$$
\begin{aligned}
\theta_x^{e_1} &= \frac{2}{h_{e_1}}\left(u_0^{e_1} - u_0^v - \frac{h_v}{2}\theta_x^v - \frac{h_v^2}{4}u_0^{*v} - \frac{h_v^3}{8}\theta_x^{*v}\right)\\
\theta_y^{e_1} &= \frac{2}{h_{e_1}}\left(v_0^{e_1} - v_0^v - \frac{h_v}{2}\theta_y^v - \frac{h_v^2}{4}v_0^{*v} - \frac{h_v^3}{8}\theta_y^{*v}\right)\\
\theta_x^{e_2} &= \frac{2}{h_{e_2}}\left(-u_0^{e_2} + u_0^v - \frac{h_v}{2}\theta_x^v + \frac{h_v^2}{4}u_0^{*v} - \frac{h_v^3}{8}\theta_x^{*v}\right)\\
\theta_y^{e_2} &= \frac{2}{h_{e_2}}\left(-v_0^{e_2} + v_0^v - \frac{h_v}{2}\theta_y^v + \frac{h_v^2}{4}v_0^{*v} - \frac{h_v^3}{8}\theta_y^{*v}\right)\\
\theta_z^v &= \frac{w_0^{e_1} - w_0^{e_2}}{h_v}\\
w_0^{*v} &= \frac{4}{h_v^2}\left(\frac{w_o^{e_1} + w_0^{e_2}}{2} - w_0^v\right)
\end{aligned}
\tag{5}
$$

These relations allow us to retain the translational degrees of freedom of the face layers, while eliminating the corresponding rotational ones. At the same time, the higher order terms in the transverse displacement expansion of the core are also eliminated. Hence, the generalized displacement field has 15 unknowns.

2.1 Linear strains

2.1.1 Viscoelastic core

The non-zero linear strains associated with the assumed displacement field for the viscoelastic core layer are:

$$
\begin{aligned}
\varepsilon_x^v &= \frac{\partial u_0^v}{\partial x} + z\frac{\partial \theta_x^v}{\partial x} + z^2\frac{\partial u_0^{*v}}{\partial x} + z^3\frac{\partial \theta_x^{*v}}{\partial x} \\
\varepsilon_y^v &= \frac{\partial v_0^v}{\partial y} + z\frac{\partial \theta_y^v}{\partial y} + z^2\frac{\partial v_0^{*v}}{\partial y} + z^3\frac{\partial \theta_y^{*v}}{\partial y} \\
\varepsilon_z^v &= \theta_z^v + 2zw_0^{*v} \\
\gamma_{yz}^v &= \left(\theta_y^v + \frac{\partial w_0}{\partial y}\right) + z\left(2v_0^{*v} + \frac{\partial \theta_z^v}{\partial y}\right) + z^2\left(3\theta_y^{*v} + \frac{\partial w_0^{*v}}{\partial y}\right) \\
\gamma_{xz}^v &= \left(\theta_x^v + \frac{\partial w_0}{\partial x}\right) + z\left(2u_0^{*v} + \frac{\partial \theta_z^v}{\partial x}\right) + z^2\left(3\theta_x^{*v} + \frac{\partial w_0^{*v}}{\partial x}\right) \\
\gamma_{xy}^v &= \left(\frac{\partial u_0^v}{\partial y} + \frac{\partial v_0^v}{\partial x}\right) + z\left(\frac{\partial \theta_x^v}{\partial y} + \frac{\partial \theta_y^v}{\partial x}\right) \\
&\quad + z^2\left(\frac{\partial u_0^{*v}}{\partial y} + \frac{\partial v_0^{*v}}{\partial x}\right) + z^3\left(\frac{\partial \theta_x^{*v}}{\partial y} + \frac{\partial \theta_y^{*v}}{\partial x}\right)
\end{aligned}
\tag{6}
$$

which can be written in the form:

$$
\begin{aligned}
\varepsilon_x^v &= \varepsilon_{x0}^v + z\kappa_x^v + z^2{\varepsilon_{x0}^*}^v + z^3\kappa_x^{*v} \\
\varepsilon_y^v &= \varepsilon_{y0}^v + z\kappa_y^v + z^2{\varepsilon_{y0}^*}^v + z^3\kappa_y^{*v} \\
\varepsilon_z^v &= \varepsilon_{z0}^v + z\kappa_z^v \\
\gamma_{yz}^v &= \gamma_{yz0}^v + z\kappa_{yz}^v + z^2{\gamma_{yz0}^*}^v \\
\gamma_{xz}^v &= \gamma_{xz0}^v + z\kappa_{xz}^v + z^2{\gamma_{xz0}^*}^v \\
\gamma_{xy}^v &= \gamma_{xy0}^v + z\kappa_{xy}^v + z^2{\gamma_{xy0}^*}^v + z^3{\kappa_{xy}^*}^v
\end{aligned}
\tag{7}
$$

where ε_{x0}^v, ε_{y0}^v, ε_{z0}^v, γ_{xy0}^v, γ_{yz0}^v and γ_{xz0}^v are the core mid-surface strains, κ_x^v, κ_y^v, κ_z^v, κ_{xy}^v, κ_{yz}^v and κ_{xz}^v represent the curvatures associated with the first order terms in the series expansion, ${\varepsilon_{x0}^*}^v$, ${\varepsilon_{y0}^*}^v$, ${\gamma_{xy0}^*}^v$, ${\gamma_{yz0}^*}^v$ and ${\gamma_{xz0}^*}^v$ describe the strains associated with the second order terms and κ_x^{*v} , κ_y^{*v} and ${\kappa_{xy}^*}^v$ correspond to curvatures associated with the third order terms.

These quantities can be grouped in three vectors, containing membrane (m), bending (b) and shear (s) terms, respectively:

$$
\begin{aligned}
\{\varepsilon_m\}^v &= \left[\begin{array}{cccccc} \varepsilon_{x0}^v & \varepsilon_{y0}^v & \gamma_{xy0}^v & {\varepsilon_{x0}^*}^v & {\varepsilon_{y0}^*}^v & {\gamma_{xy0}^*}^v & \varepsilon_{z0}^v \end{array}\right]^T \\
\{\varepsilon_b\}^v &= \left[\begin{array}{cccccc} \kappa_x^v & \kappa_y^v & \kappa_{xy}^v & \kappa_x^{*v} & \kappa_y^{*v} & {\kappa_{xy}^*}^v & \kappa_z^v \end{array}\right]^T \\
\{\varepsilon_s\}^v &= \left[\begin{array}{cccccc} \gamma_{yz0}^v & \gamma_{xz0}^v & {\gamma_{yz0}^*}^v & {\gamma_{xz0}^*}^v & \kappa_{yz}^v & \kappa_{xz}^v \end{array}\right]^T
\end{aligned}
\tag{8}
$$

2.1.2 Elastic laminated face layers

The non-zero linear strains associated with the assumed first order displacement field for these layers are:

$$
\begin{aligned}
\varepsilon_x^i &= \frac{\partial u_0^i}{\partial x} + (z - z_i)\frac{\partial \theta_x^i}{\partial x} \\
\varepsilon_y^i &= \frac{\partial v_0^i}{\partial y} + (z - z_i)\frac{\partial \theta_y^i}{\partial y} \\
\gamma_{yz}^i &= \theta_y^i + \frac{\partial w_0^i}{\partial y} \\
\gamma_{xz}^i &= \theta_x^i + \frac{\partial w_0^i}{\partial x} \\
\gamma_{xy}^i &= \left(\frac{\partial u_0^i}{\partial y} + \frac{\partial v_0^i}{\partial x}\right) + (z - z_i)\left(\frac{\partial \theta_x^i}{\partial y} + \frac{\partial \theta_y^i}{\partial x}\right)
\end{aligned}
\tag{9}
$$

where $i = e_1, e_2$.

These linear strains for the elastic face layers can also be written in the form:

$$
\begin{aligned}
\varepsilon_x^i &= \varepsilon_{x0}^i + z\kappa_x^i \\
\varepsilon_y^i &= \varepsilon_{y0}^i + z\kappa_y^i \\
\gamma_{yz}^i &= \gamma_{yz0}^i \\
\gamma_{xz}^i &= \gamma_{xz0}^i \\
\gamma_{xy}^i &= \gamma_{xy0}^i + z\kappa_{xy}^i
\end{aligned}
\tag{10}
$$

where ε_{x0}^i, ε_{y0}^i, γ_{xy0}^i, γ_{yz0}^i and γ_{xz0}^i are the layer mid-surface strains, and κ_x^i, κ_y^i and κ_{xy}^i describe the curvatures for layer $i = e_1, e_2$. These quantities can be grouped in three vectors, containing membrane (m), bending (b) and shear (s) terms, respectively:

$$
\begin{aligned}
\{\varepsilon_m\}^i &= \left[\begin{array}{ccc} \varepsilon_{x0}^i & \varepsilon_{y0}^i & \gamma_{xy0}^i \end{array}\right]^T \\
\{\varepsilon_b\}^i &= \left[\begin{array}{ccc} \kappa_x^i & \kappa_y^i & \kappa_{xy}^i \end{array}\right]^T \\
\{\varepsilon_s\}^i &= \left[\begin{array}{cc} \gamma_{yz0}^i & \gamma_{xz0}^i \end{array}\right]^T
\end{aligned}
\tag{11}
$$

2.2 Constitutive relations

We consider that fibre-reinforced laminae in elastic multi-layers (e_1) and (e_2), and the viscoelastic core (v) are characterized as orthotropic. However, due to the different nature of the displacement fields in the face layers and in the core, the constitutive relations are going to be different.

For the laminas in the elastic laminated face layers, constitutive equations for each lamina may be expressed in the principal material directions, assuming zero transverse normal stress as [15, 16]:

$$\begin{Bmatrix} \sigma_{11} \\ \sigma_{22} \\ \sigma_{23} \\ \sigma_{13} \\ \sigma_{12} \end{Bmatrix} = \begin{bmatrix} Q_{11} & Q_{12} & 0 & 0 & 0 \\ Q_{12} & Q_{22} & 0 & 0 & 0 \\ 0 & 0 & Q_{44} & 0 & 0 \\ 0 & 0 & 0 & Q_{55} & 0 \\ 0 & 0 & 0 & 0 & Q_{66} \end{bmatrix} \begin{Bmatrix} \varepsilon_{11} \\ \varepsilon_{22} \\ \gamma_{23} \\ \gamma_{13} \\ \gamma_{12} \end{Bmatrix} \tag{12}$$

where σ_{ij} are stress components, ε_{ij} and γ_{ij} are strain components, Q_{ij} are reduced stiffness coefficients. Expressions for the reduced quantities mentioned above in terms of engineering constants can be found in [15, 16].

For the viscoelastic core, a full 3D orthotropic stiffness matrix is used in the principal material directions [15, 16]:

$$\begin{Bmatrix} \sigma_{11} \\ \sigma_{22} \\ \sigma_{33} \\ \sigma_{23} \\ \sigma_{13} \\ \sigma_{12} \end{Bmatrix} = \begin{bmatrix} C_{11} & C_{12} & C_{13} & 0 & 0 & 0 \\ C_{12} & C_{22} & C_{23} & 0 & 0 & 0 \\ C_{13} & C_{23} & C_{33} & 0 & 0 & 0 \\ 0 & 0 & 0 & C_{44} & 0 & 0 \\ 0 & 0 & 0 & 0 & C_{55} & 0 \\ 0 & 0 & 0 & 0 & 0 & C_{66} \end{bmatrix} \begin{Bmatrix} \varepsilon_{11} \\ \varepsilon_{22} \\ \varepsilon_{33} \\ \gamma_{23} \\ \gamma_{13} \\ \gamma_{12} \end{Bmatrix} \tag{13}$$

Expressions for the stiffness coefficients C_{ij}, in terms of engineering quantities, can be found in [15, 16]. Furthermore, for the viscoelastic core layer, the stiffness coefficients C_{ij} are complex quantities, since the complex modulus approach was used in this work, using the elastic-viscoelastic correspondence principle [17]. In this case, and for isothermal conditions, the usual engineering moduli may be represented by complex quantities:

$$\begin{aligned} E_1(i\omega) &= E_1'(\omega)(1 + i\eta_{E_1}(\omega)) \\ E_2(i\omega) &= E_2'(\omega)(1 + i\eta_{E_2}(\omega)) \\ E_3(i\omega) &= E_3'(\omega)(1 + i\eta_{E_3}(\omega)) \\ G_{12}(i\omega) &= G_{12}'(\omega)(1 + i\eta_{G_{12}}(\omega)) \\ G_{23}(i\omega) &= G_{23}'(\omega)(1 + i\eta_{G_{23}}(\omega)) \\ G_{13}(i\omega) &= G_{13}'(\omega)(1 + i\eta_{G_{13}}(\omega)) \\ \nu_{12}(i\omega) &= \nu_{12}'(\omega)(1 - i\eta_{\nu_{12}}(\omega)) \\ \nu_{23}(i\omega) &= \nu_{23}'(\omega)(1 - i\eta_{\nu_{23}}(\omega)) \\ \nu_{13}(i\omega) &= \nu_{13}'(\omega)(1 - i\eta_{\nu_{13}}(\omega)) \end{aligned} \tag{14}$$

where the prime quantities denote storage moduli, associated material loss factors are represented by the letter η, ω represents frequency of vibration and $i = \sqrt{-1}$ is the

imaginary unit. Furthermore, in Equation (14), E, G and ν denote Young's moduli, shear moduli and Poisson's ratio, respectively.

The use of the complex modulus approach in linear viscoelasticity allows for the direct use of experimentally obtained frequency dependent material properties to obtain the frequency domain response in steady state oscillatory conditions. Additionally, it is also possible to obtain transient responses from this approach, considering a trigonometric expansion of the excitation and Fourier analysis [17, 18]. Hence, time domain transient responses can be obtained by inverse Fourier analysis, as long as the viscoelastic material model is causal [1, 17, 18], which is usually the case when frequency dependent experimental complex moduli are used.

The definition of the constitutive relations of a laminate is usually made in terms of stress resultants [19]. These forces and moments for the present model are defined separately for the viscoelastic core (v) and for the elastic multilayered laminates (e_1) and (e_2), and are obtained in the plate natural coordinate system, which is usually rotated with respect to the principal material axes [15, 16].

3 Finite element formulation

The equations of motion for the plate are obtained by applying the extended Hamilton's principle:

$$\delta \int_{t_1}^{t_2} \mathcal{L}\, dt = 0 \tag{15}$$

where δ is the variational symbol, and $\mathcal{L}$ represents the Lagrangian of the system, defined as follows:

$$\mathcal{L} = \sum_{i=e_1,v,e_2} (T_i - U_i) - W \tag{16}$$

In Equation (16), T_i is the kinetic energy and U_i is the strain energy of each layer in the sandwich, and W is the work done by externally applied loads. It should be noted that dissipative terms are included in the strain energy of the core (U_v) via the complex modulus approach.

The kinetic and elastic energies in Equation (16) are defined as:

$$\begin{aligned} T_i &= \frac{1}{2} \int_{\Omega_i} \rho_i \{\dot{u}\}_i^T \{\dot{u}\}_i \, d\Omega_i \\ U_i &= \frac{1}{2} \int_{\Omega_i} \{\varepsilon\}_i^T \{\sigma\}_i \, d\Omega_i \end{aligned} \tag{17}$$

where Ω_i represents the volume domain of the layer, ρ_i is mass per unit volume of the material, $\{\sigma\}_i$ and $\{\varepsilon\}_i$ are the stress and strain vectors, respectively, and $\{\dot{u}\}$ is the

time derivative of the displacement field vector $\{u\}_i = \{u^i, v^i, w^i\}^T$, which can be expressed as:

$$\{u\}_i = [Z]_i \{d\} \tag{18}$$

where the vector of the mechanical degrees of freedom is:

$$\{d\} = \left[\begin{array}{ccccccccccccccc} u_0^{e_2} & v_0^{e_2} & w_0^{e_2} & u_0^v & v_0^v & w_0 & \theta_x^v & \theta_y^v & u_0^{*v} & v_0^{*v} & \theta_x^{*v} & \theta_y^{*v} & u_0^{e_1} & v_0^{e_1} & w_0^{e_1} \end{array} \right]^T \tag{19}$$

and the $[Z]_i$ matrices are obtained using Equations (1) and (2), along with Equation (5).

The external work W in Equation (16) can be written as:

$$W = \int_\Omega \{d\}^T \{f_b\} \, d\Omega + \int_S \{d\}^T \{f_s\} \, dS + \{d\}^T \{f_c\} \tag{20}$$

where $\{f_b\}$, $\{f_s\}$ and $\{f_c\}$ are the vectors of body forces, surface tractions and concentrated forces, respectively, and Ω and S represent volume and surface domains of the plate, respectively.

Carrying on the integration in the thickness direction in Equations (17) and (20) and substituting the result in Equations (16) and (15), one obtains the variational equation of motion for the sandwich plate, the solution of which was obtained through the finite element method, using an eight node serendipity element with 15 mechanical degrees of freedom per node. The generalised displacements of the element can be expressed as a function of the element nodal degrees of freedom:

$$\begin{aligned} \{d\}^{(e)} &= [N] \{a\}^{(e)} \\ \{a\}^{(e)} &= \left[\begin{array}{ccc} \{d\}_1^{(e)T} & \dots & \{d\}_8^{(e)T} \end{array} \right]^T \end{aligned} \tag{21}$$

where $[N]$ contains the serendipity shape functions for the element [20].

The strains are related to the element degrees of freedom through:

$$\begin{aligned} \{\varepsilon_m\}^{(e)} &= [B_m]^{(e)} \{a\}^{(e)} \\ \{\varepsilon_b\}^{(e)} &= [B_b]^{(e)} \{a\}^{(e)} \\ \{\varepsilon_s\}^{(e)} &= [B_s]^{(e)} \{a\}^{(e)} \end{aligned} \tag{22}$$

where the strain matrices $[B_m]^{(e)}$, $[B_b]^{(e)}$ and $[B_s]^{(e)}$ can be obtained from the shape functions and their derivatives, and are calculated on a layer-by-layer basis.

The following equilibrium equation in matrix form is obtained:

$$[M]^{(e)} \{\ddot{a}\}^{(e)} + [K]^{(e)} \{a\}^{(e)} = \{F\}^{(e)} \tag{23}$$

where the mass and stiffness matrices in Equation (23) are expressed as:

$$\begin{aligned}
[M]^{(e)} &= \sum_i \int_{-1}^{+1} \int_{-1}^{+1} [N]^T [P]_i [N] \det [J] \; d\xi d\eta \\
[K]^{(e)} &= \sum_i \int_{-1}^{+1} \int_{-1}^{+1} \Big([B_m]_i^{(e)T} [D_m]_i [B_m]_i^{(e)} + [B_b]_i^{(e)T} [D_c]_i [B_m]_i^{(e)} \\
&\quad + [B_m]_i^{(e)T} [D_c]_i [B_b]_i^{(e)} + [B_b]_i^{(e)T} [D_b]_i [B_b]_i^{(e)} \\
&\quad + [B_s]_i^{(e)T} [D_s]_i [B_s]_i^{(e)} \Big) \det [J] \; d\xi d\eta
\end{aligned} \tag{24}$$

where $[J]$ is the Jacobian of the transformation. Detailed expressions for matrices $[P]$, $[D_m]^{(e)}$, $[D_c]^{(e)}$, $[D_b]^{(e)}$ and $[D_s]^{(e)}$ can be found in [19].

The element load vector is given by:

$$\begin{aligned}
\{F\}^{(e)} &= \int_{-1}^{+1} \int_{-1}^{+1} [N]^T \{f_b\}^{(e)} h \det [J] \; d\xi d\eta + \int_{-1}^{+1} \int_{-1}^{+1} [N]^T \{f_s\}^{(e)} \det [J] \; d\xi d\eta \\
&\quad + [N]^T \{f_c\}^{(e)}
\end{aligned} \tag{25}$$

All necessary integrations are performed numerically, using Gauss-Legendre numerical integration, and selective integration is employed in order to avoid shear locking. One should also note that the viscoelastic behaviour of the core translates into a complex element stiffness matrix $[K]^{(e)}$.

The system equilibrium equations are obtained in the usual way through assembly of the element equations, yielding

$$[M] \{\ddot{a}\} + [K] \{a\} = \{F\} \tag{26}$$

where $\{a\}$ and $\{\ddot{a}\}$ are degrees of freedom and corresponding accelerations, respectively. $[M]$ and $[K]$ are the mass and complex stiffness matrices, respectively, and $\{F\}$ is the externally applied load vector.

Assuming harmonic vibrations, the final equilibrium equations are given by:

$$\big[[K(\omega)] - \omega^2 [M]\big] \{a\} = \{F\} \tag{27}$$

The forced vibration problem is solved in the frequency domain, which implies the solution of the following linear system of equations for each frequency point:

$$\left[[K(\omega)] - \omega^2 [M_{uu}]\right] \{a(\omega)\} = \{F(\omega)\} \tag{28}$$

where $\{F(\omega)\} = \mathcal{F}(\{F(t)\})$ is the Fourier transform of the time domain force history $\{F(t)\}$.

For the free vibration problem, Equation (28) reduces to the following non-linear eigenvalue problem:

$$[[K(\omega)] - \lambda_n^* [M]] \{a\}_n = \{0\} \tag{29}$$

where, the complex eigenvalue λ_n^* is written as:

$$\lambda_n^* = \lambda_n (1 + i\eta_n) \tag{30}$$

and $\lambda_n = \omega_n^2$ is the real part of the complex eigenvalue and η_n is the corresponding modal loss factor.

The non-linear eigenvalue problem is solved iteratively using ARPACK [21] with a shift-invert transformation. The iterative process is considered to have converged when:

$$\frac{\|\omega_i - \omega_{i-1}\|}{\omega_{i-1}} \leq \epsilon \tag{31}$$

where ω_i and ω_{i-1} are current and previous iteration values for the real part of the particular eigenfrequency of interest, respectively, and ϵ is the convergence tolerance.

4 Application

The validation of the sandwich plate finite element model for free vibration is conducted comparing natural frequencies for a sandwich square plate and a sandwich beam with central viscoelastic soft cores. The modal loss factors are also computed for a sandwich beam with damped core material.

4.1 Sandwich square plate

A simply supported sandwich square plate with orthotropic cross ply laminate skins ($0°/90°/$core$/90°/0°$) of in-plane dimensions $a \times a$, with width to thickness $a/h = 10$ and $a/h = 100$ is considered [14]. The skin to core thickness ratio is $h_{\text{core}}/h_{\text{skin}} = 10$. The core is made of an isotropic material with $E = 6.89$ MPa, $G = 3.45$ MPa, $\nu = 0$ and $\rho = 97$ kg/m^3. The properties of the face layer properties $E_1 = 131$ GPa, $E_2 = E_3 = 10.34$ GPa, $G_{12} = G_{13} = 6.895$ GPa, $G_{23} = 6.205$ GPa, $\nu_{12} = \nu_{13} = 0.22$, $\nu_{23} = 0.49$ and $\rho = 1627$ kg/m^3. The simply supported conditions are of the following type: $v = w = 0$ at $x = 0, a$ and $u = w = 0$ at $y = 0, a$.

The natural frequencies obtained are normalised as:

$$\bar{\omega} = \omega \frac{a^2}{h} \sqrt{\left(\frac{\rho}{E_2}\right)_{\text{skin}}} \tag{32}$$

Natural frequencies obtained with a 14×14 mesh are listed in Table 1 and compared with semi-analytical solutions obtained by Rao and Desai [22] and finite element layerwise solutions by Moreira and Rodrigues [14]. A good agreement is observed between the present solution and the reference ones. The present solution is particularly close to the one reported by Rao and Desai [22] due to the similar nature of the expansion of the transverse displacement of the core, whereas Moreira and Rodrigues [14] use an out-of-plane spring stiffness concept to allow for transverse compressibility of the core.

		Modes					
		(1,1)	(1,2)	(2,2)	(1,3)	(2,3)	(3,3)
$a/h = 10$	Present	1.8480	3.2204	4.2913	5.2274	6.0997	7.6872
	[22]	1.8480	3.2196	4.2894	5.2236	6.0942	7.6762
	[14]	1.8391	3.1947	4.2142	5.1901	5.9607	7.3988
$a/h = 100$	Present	11.942	23.403	30.945	36.147	41.455	49.791
	[22]	11.940	23.402	30.943	36.143	41.447	49.762
	[14]	11.888	23.168	30.272	35.444	40.037	47.214

Table 1: Normalised natural frequencies of sandwich square plate.

4.2 Sandwich beam

In this example, a wide beam with thin steel skins and a thick soft polymer foam core is considered. The beam is clamped at one edge and free at the other. The length of the beam is $L = 260$ mm and the width is $b = 59.9$ mm. The thickness of the foam core is $h_v = 34.8$ mm and the thin steel face layers have thickness $h_{e_1} = h_{e_2} = 1.9$ mm. For steel, the material properties are $E = 210$ GPa, $\nu = 0.3$ and $\rho = 7900$ kg/m^3. The material properties of the foam core (Divinycell H60) are $E = 56$ MPa, $\nu = 0.27$ and $\rho = 60$ kg/m^3.

The obtained bending natural frequencies with a mesh of 12×3 elements are presented in Table 2 along with the ones reported by Sokolinsky et al. [23] and Moreira and Rodrigues [14]. The natural frequencies that are presented are grouped in two categories, corresponding to the anti-symmetric and symmetric bending of the beam. The anti-symmetric modes are those where the two faces of the sandwich vibrate in phase opposition (thickness-stretch modes), whereas the symmetric modes correspond to the usual beam bending modes, where the core compressibility is less of an issue. Once again a good agreement was achieved.

Mode	Present	2D FEM [23]	Higher-order theory [23]	[14]
Anti-symmetric				
1	164.7	165	165	164.8
2	511.4	512	511	511.5
3	911.1	913	910	912.0
4	1375	1379	1373	1376
Symmetric				
1	2422	2476	2393	2578
2	2441	2509	2398	2582
3	2528	2558	2430	2617
4	2606	2567	2534	2727

Table 2: Natural frequencies of cantilever sandwich beam (Hz).

4.3 Damped sandwich beam

The same beam is now considered with 10% damping for the core material. The results for natural frequencies and modal loss factors are presented in Table 3. It can be observed, as expected [23], that the thickness-stretch modes are in general more heavily damped than the bending ones.

Mode	Natural frequency (Hz)	Modal loss factor (%)
Anti-symmetric		
1	164.7	8.8
2	511.5	8.3
3	911.2	7.6
4	1375	6.4
Symmetric		
1	2422	9.9
2	2441	9.9
3	2528	9.0
4	2606	4.1

Table 3: Natural frequencies and modal loss factors of damped cantilever sandwich beam.

5 Conclusion

A new sandwich plate finite element was presented with compressible viscoelastic core. A layerwise approach was used, where the core and face layers are modelled using different theories (first order for the faces and higher order for the core), in

order to capture properly the high shear effects in the core. The solutions for free vibration presented in the paper show an excellent agreement of the obtained natural frequencies with the ones reported in the literature, for both bending and thickness-stretch modes. An example was also presented for a damped sandwich beam, were it is evident that the thickness-stretch modes are more heavily damped than the bending modes.

References

[1] A.D. Nashif, D.I.G. Jones and J.P. Henderson, "Vibration Damping", John Wiley & Sons, 1985.

[2] C.T. Sun and Y.P. Lu, "Vibration Damping of Structural Elements", Prentice Hall PTR, Englewood Cliffs, New Jersey, 1995.

[3] R.A. DiTaranto, "Theory of vibratory bending for elastic and viscoelastic layered finite-length beams", ASME Journal of Applied Mechanics, 32, 881-886, 1965.

[4] D.J. Mead and S. Markus, "The forced vibration of a three-layer, damped sandwich beam with arbitrary boundary conditions", AIAA Journal, 10, 163-175, 1969.

[5] D.K. Rao, "Frequency and loss factors of sandwich beams under various boundary conditions", International Journal of Mechanical Engineering Science, 20, 271-278, 1978.

[6] M.J. Yan and E.H. Dowell, "Governing equations of vibrating constrained-layer damping sandwich plates and beams", ASME Journal of Applied Mechanics, 39, 1041-1046, 1972.

[7] M.D. Rao and S. He, "Dynamic analysis and design of laminated composite beams with multiple damping layers", AIAA Journal, 31, 736-745, 1993.

[8] B.E. Douglas and J.C.S. Yang, "Transverse compressional damping in the vibratory response of elastic-viscoelastic beams", AIAA Journal, 16, 925-930, 1978.

[9] A.L. Araújo, C.M. Mota Soares, C.A. Mota Soares, "Finite element model for hybrid active-passive damping analysis of anisotropic laminated sandwich structures", Journal of Sandwich Structures and Materials, 12, 397-419, 2010.

[10] A.L. Araújo, C.M. Mota Soares, C.A. Mota Soares, "A Viscoelastic Sandwich Finite Element Model for the Analysis of Passive, Active and Hybrid Structures", Applied Composite Materials, 17, 529-542, 2010.

[11] J.S. Moita, A.L. Araújo, P. Martins, C.M. Mota Soares, C.A. Mota Soares, "A Finite Element Model for the Analysis of Viscoelastic Sandwich Structures", Computers & Structures, 89, 1874-1881, 2011.

[12] J.S. Moita, A.L. Araújo, P. Martins, C.M. Mota Soares, C.A. Mota Soares, "Analysis of active-passive plate structures using a simple and efficient finite element model", Mechanics of Advanced Materials and Structures, 18, 159-169, 2011.

[13] Y. Frostig and M. Baruch, "Free vibration of sandwich beams with a transversely flexible core: a higher order approach", Journal of Sound and Vibration, 176,

195-208, 1994.
[14] R.A.S. Moreira and J. Dias Rodrigues, ”Static and dynamic analysis of soft core sandwich panels with through-thickness deformation”, Composite Structures, 92, 201-215, 2010.
[15] R.M. Jones, ”Mechanics of Composite Materials”, McGraw-Hill, New York, 1975.
[16] J.N. Reddy, ”Mechanics of Laminated Composite Plates and Shells: Theory and Analysis”, 2nd edition, CRC Press, Boca Raton, 2004.
[17] R.M. Christensen, ”Theory of Viscoelasticity”, 2nd edition, Academic Press, New York, 1982.
[18] E. Barkanov, ”Transient response analysis of structures made from viscoelastic materials”, International Journal for Numerical Methods in Engineering, 44, 393-403, 1999.
[19] A.L. Araújo, C.M. Mota Soares, J. Herskovits and P. Pedersen, ”Development of a finite element model for the identification of mechanical and piezoelectric properties through gradient optimisation and experimental vibration data”, Composite Structures, 58, 307-318, 2002.
[20] K.J. Bathe, ”Finite Element Procedures”, Prentice-Hall, Englewood Cliffs, New Jersey, 1996.
[21] D.C. Sorensen, ”Implicitly restarted Arnoldi/Lanczos methods for large scale eigenvalue calculations”, Technical Report TR95-13, Department of Computational and Applied Mathematics, Rice University, Houston, Texas, 1995.
[22] M.K. Rao and Y.M. Desai, ”Analytical solutions for vibrations of laminated and sandwich plates using mixed theory”, Composite Structures, 63, 361-73, 2004.
[23] V.S. Sokolinsky, H.F. Von Bremen, J.A. Lavoie and S.R. Nutt, ”Analytical and experimental study of free vibration response of soft-core sandwich beams”, Journal of Sandwich Structures and Materials, 6, 239-261, 2004.