Paper 122

Proceedings of the Eleventh International Conference
on Computational Structures Technology,
B.H.V. Topping, (Editor),
Civil-Comp Press, Stirlingshire, Scotland

An Unabridged Push-Over Approach: Beyond POR Analyses for Three-Dimensional Masonry Buildings

O. Corbi
Department of Structural Engineering
University of Naples "Federico II", Italy

Abstract

In the paper the problem of static analysis of three-dimensional masonry buildings is approached, based on the no tension (NT) assumption of its wall elements. The novelty of the method mainly consists of performing a full holonomic plastic analysis of the structure, which is decomposed in its structural elements, starting from the treatment of the single masonry panel using the NT theory. The proposed approach allows a more exhaustive representation of its behaviour with respect to the classical POR approach, as well as the inclusion of architraves and tendons in the walls.

Keywords: push-over, three-dimensional masonry structures, holonomic-plastic behaviour, no tension model.

1 Introduction

For masonry structures, the proneness to disease or collapse is much more dependent on the activation of cracking mechanisms than on the probability of crushing in compression of masonry [1], thus requiring that the material model should include fracturing as an intrinsic pattern for the stress-strain relationships, pushing researchers to develop structural mechanics for no-tension (NT) materials (see e.g. [2]-[24]).

Solution stress and strain fields are proven to satisfy classical variational principles, like the minimum principles of Complementary and Total Energy functionals, respectively on the compatibility and equilibrium side (see e.g. [4] and [5]). By implementing the adopted mechanical model and following solution paths, based on the constrained optimisation of the above mentioned energetic functionals, practical applications may be successfully developed not only with reference to the single masonry monads such as panels, arches and vaults, but also for analysing the entire masonry building under static loads, and perform, for example, push-over analyses.

Extensions can be provided as well for the analysis under quasi-static seismic-type actions, when the masonry structure exhibits some overall ductility properties, possibly entering a kind of plastic phase and developing hysteretic cycles.
This feature is pretty important for the forecast and design of possible control [25]-[28] applications for the protection of monumental buildings, which appear especially useful in the absence of the environmental forecast [29]-[30].

The approach offers some clear advantages with respect to frame equivalent based methods usually adopted in the professional practice, since the initially performed NT analyses of the walls allow to treat them as a whole, also including elements such as architraves possibly present on the doorways or openings, which, on the contrary are not considered in the POR. Moreover some strength in the cross direction of the wall can also be accounted for by the assumption of an elliptical resistance domain.

Finally also collapse mechanism related to the overturning of the wall can be considered, which are absent in the usually adopted approaches.

2 The reference 3D masonry model

The reference model is represented in Figures 1 and 2. It consists of a 3D 1-storey masonry structure with a rigid floor slab, four perimeter walls and a further internal wall.

A monotonically increasing static load, expressed by two vector components along the two coordinate axes, is assumed to act on the considered 1-story frame for the push-over analysis.

In the considered model, the Lagrangian coordinates are the two components of floor rigid translation, $u(t)$ and $v(t)$, that can be identified in the displacement components of the reference frame origin point G, and the xy-axes rotation $\phi(t)$.

Treating the masonry walls as shown in the following Section 3, under the standard No Tension assumption on the masonry behaviour, the walls can be shown to exhibit an overall ductility of the type depicted in Figures 3 and 4, which can be, more simply, approximated by the bi-linear dashed diagram.

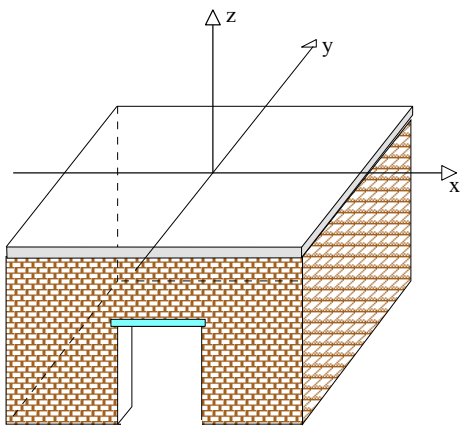

Figure 1: Reference 3D masonry model.

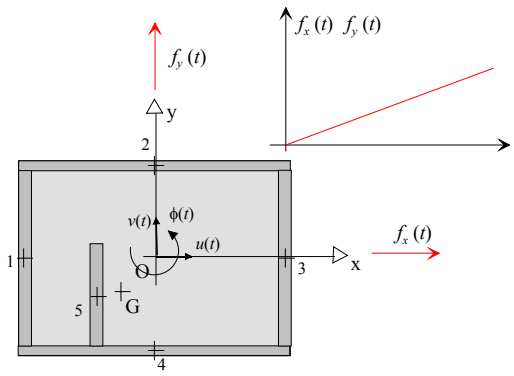

Figure 2: Plant of the 3D masonry model with the static load components monotonically increasing according to the parameter t.

Therefore one may assume a kind of elastic-perfectly-plastic behaviour with indefinite ductility for the walls, denoting by T_{xi}, T_{yi} the components of the shear absorbed by the i-th wall, by T_{oxi}, T_{oyi} its limit shears and by k_{xi}, k_{yi} its stiffnesses.

3 Theoretical approach to the analysis of planar masonry structures

Under the standard no tension (NT) material assumption [1], the analysis of the walls of a three-dimensional masonry model can be successfully carried on by developing finite elements models [2]-[24] and adopting optimisation (*stress* or *strain*) procedures [31], deriving from the implementation of the basic variational methods extended to NT models.

When considering the single NT panel loaded by in-plane forces, its discrete model can be adopted with a mesh assembled by constant stress/strain elements.

In the proposed approach one performs a complete discrete NT analysis of the panel under the active forces, which in the specific case of push-over analysis are assumed of static type and monotonically increasing, and imposes wither the compatibility equations between the elements' elastic and fracture strains and the nodal displacements, or the equilibrium conditions between elements' stresses and nodal loads.

Some constraints to the problem derive from the adopted NT hypothesis. First of all, the compatibility requires that the additional fracture field does not admit contraction in any point and along any direction, thus implying that the fracture strain field is positive semi-definite. Moreover purely compressive stresses are activated at any point of the body, which implies the negative definition of the stress tensor all over the body.

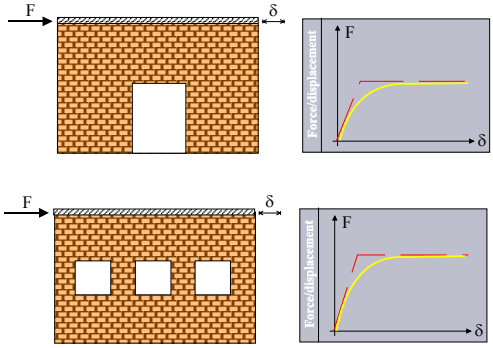

Figure 3: Typical force-displacement F-δ diagrams in masonry panels subject to an horizontal action.

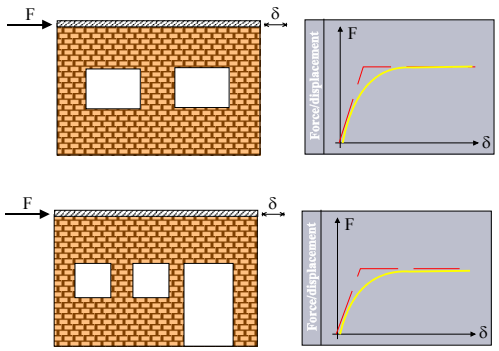

Figure 4: Typical force-displacement F-δ diagrams in masonry panels subject to an horizontal action.

As regards to NT panels loaded by in-plane forces the displacement approach appears the more convenient one.

Therefore the solution displacement and fracture strain fields can be searched for as the constrained minimum of the *Total Potential Energy* (TPE) functional, under the NT admissibility condition, which imposes that the fracture field is positively semi-definite at any point.

By performing numerical simulation on masonry panels with different openings and geometric characteristics, one can observe an overall behaviour of the panel of the type illustrated in Figures 3 and 4, thus resulting in an overall ductility of the panel, which, more simply, can be approximated by the bi-linear dashed diagram.

This allows to set up the static analysis even of 3D masonry buildings by adopting the fully holonomic-plastic equations, like it is performed in the following Section 4, where the numerical investigation results are reported for the considered 3D NT model.

4 Numerical results of push-over analysis

According to what considered in the previous Section 3, the analysis of the NT 3-degrees of freedom model shown in Figures 1 and 2, by means of fully holonomic-plastic relations, as mentioned in Section 2, is implemented in an ad-hoc set up calculus code, and the numerical investigation is developed under static load.

A static forcing action inclined of 45° with respect to the reference system, composed by two static loads $f_x(t)$, $f_y(t)$ monotonically increasing with the parameter t with final value T=12 and steps of Δt=0.02, is considered for executing the push-over analysis (Figure 2).

The final value attained by each force component is equal to 48917 kg.

For simplicity, the plasticity domain of each masonry wall of the 3D model is assumed to have an elliptical shape, with the principal axes parallel to the edges of the panel cross-sections in plant.

As regards to the 3D model, the floor has been assumed to be organized in such a way to transmit a vertical uniformly distributed load of approximately 500 kg·m^{-2} .

The geometric and mechanical characteristics of the walls as numbered in Figure 2 are reported respectively in Table 1, where, with reference to the i-th wall, x_i , y_i, denote the position of its barycenter with respect to the reference system, λ_i its longitudinal dimension, s_i its thickness, T_{oxi} , T_{oyi} denote its limit shears and k_{xi}, k_{yi} its stiffnesses.

Wall "i"	x_i (cm)	y_i (cm)	λ_i (cm)	s_i (cm)	T_{oxi} (kg)	T_{oyi} (kg)	k_{xi} (kg·cm^{-1})	k_{yi} (kg·cm^{-1})
1	-500	0	500	40	860	10833	945	57000
2	0	250	1000	40	21666	1720	114000	1889
3	500	0	500	40	860	10833	945	57000
4	0	-250	1000	40	21666	1720	114000	1889
5	-250	-125	250	40	430	5416	472	28500

Table 1: Geometric and mechanical characteristics of the walls of the 3D model.

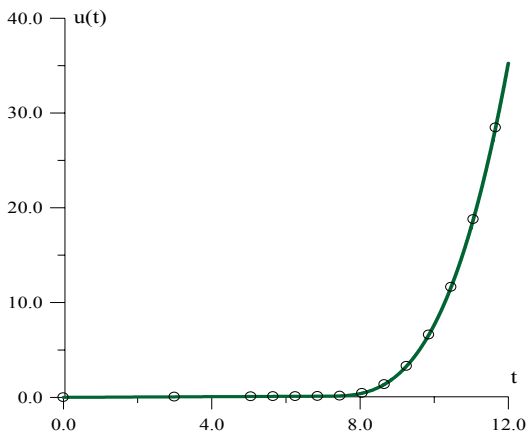

Figure 5: Barycenter u-component displacement (cm) vs the force increment parameter t.

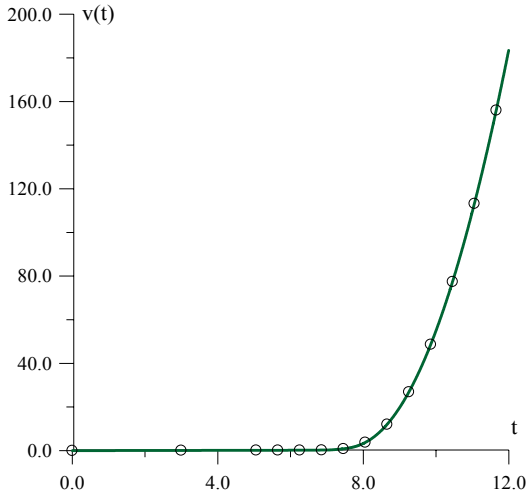

Figure 6: Barycenter *v*-component displacement (cm)
vs the force increment parameter t

In Figures 5, 6 and 7 the generalized displacement components of the frame barycenter, $u(t)$, $v(t)$ and $\phi(t)$ are reported vs the time variable t.

In Figures 8 and 9 the forcing actions adopted for the simulations vs the relevant axis displacement components are depicted, in order to check the collapse condition and the limit load.

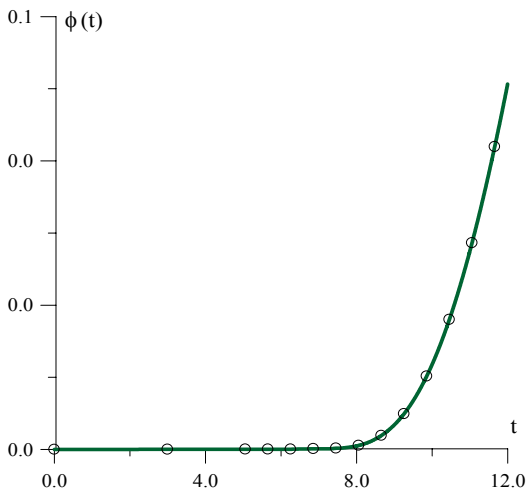

Figure 7: Floor rotation ϕ (°) vs the force increment parameter t.

5 Conclusions

In this paper the push-over analysis of spatial masonry building is performed by an original approach, accounting for the NT behaviour of the single masonry panels, and basically implementing the overall holonomic-plastic relations of the structure.

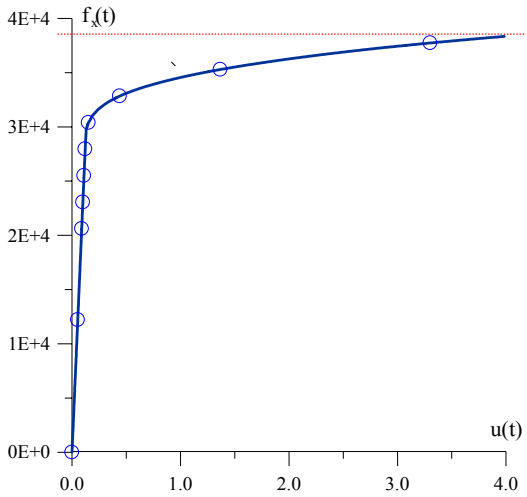

Figure 8: Forcing action *x*-component (kg) vs *u*-displacement (cm) component.

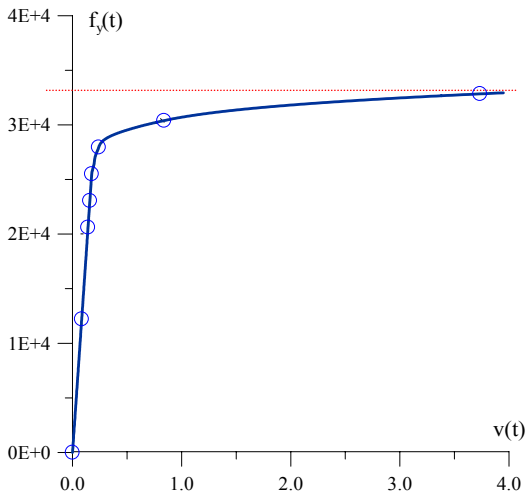

Figure 9: Forcing action *y*-component (kg) vs *v*-displacement (cm) component.

The performance of the proposed approach overcomes usual POR analyses: a more complete representation of the single wall behaviour is allowed, also including possible overturning; no need emerges of selecting single parts of the masonry panel between its openings, but it is treated as a whole; different members like architraves, tendons and reinforcements may be included; extension for dynamic analysis may be performed.

Acknowledgement

The present research has been performed thanks to the financial support by the Italian Ministry of University and Research within a PRIN project, and by the Department of Civil Protection of the Italian Government trough the ReLuis pool (convention No.823 signed 24/09/2009, Thematic Area 2-Research Line 3-Task 1).

References

[1] J. Heyman, “The safety of masonry arches”. Int. J. Mech. Sciences; 11(2), 1969.

[2] A. Baratta, “Il materiale non reagente a trazione come modello per il calcolo delle tensioni nelle pareti murarie”. J. Restauro, Napoli, 75-76, 1984.

[3] A. Baratta, G. Voiello, “Teoria delle Pareti in Muratura a Blocchi: un Modello Discretizzato di Calcolo”. In “Franco Jossa e la sua opera“. Ed. Giannini, Napoli, 1988.

[4] A. Baratta, “Statics and reliability of masonry structures”. In “Reliability Problems: General Principles and Applications in Mechanics of Solids and Structures, F.Casciati & J.B.Roberts Eds, CISM, Udine, 1991.

[5] A.Baratta, “Structural Analysis of Masonry Building”. In “Seismic Risk of Historic Center”, Ed. Città del Sole, Napoli, 1996.

[6] Baratta A., Corbi I.: "Iterative Procedure in No-Tension 2D Problems: theoretical solution and experimental applications". In: G.C.Sih & L.Nobile Eds., “Restoration, Recycling and Rejuvenation Technology for Engineering and Architecture Application”, 2004, pp. 67-75, Aracne Ed, Bologna. ISBN 88-7999-765-3

[7] M. Como, A. Grimaldi, “A Unilateral model for Limit Analysis of Masonry Walls”, in “Unilateral Problems in Structural Analysis”, Ravello, 25-46, 1983.

[8] G. Del Piero, “Constitutive equation and compatibility of the external loads for linear-elastic masonry materials”. Giornale di Meccanica, 24, 150-162, 1989.

[9] S. Di Pasquale, “Questioni di Meccanica dei Solidi Non Reagenti a Trazione”, Proc. 6th Nat. Conf. AIMETA, Genova, II, 251-263, 1982.

[10] A. Baratta, I. Corbi “Plane of Elastic Non-Resisting Tension Material under Foundation Structures”. International Journal for Numerical and Analytical Methods in Geomechanics, 2004, vol. 28, pp. 531-542, J. Wiley & Sons Ltd. ISSN 0363-9061, DOI: 10.1002/nag.349

[11] A. Baratta, I. Corbi “Spatial foundation structures over no-tension soil”. International Journal for Numerical and Analytical Methods in Geomechanics, 2005, vol. 29, pp. 1363-1386, Wiley Ed. ISSN: 03639061, DOI: 10.1002/nag.464

[12] A. Baratta, I. Corbi, "On the Statics of Masonry Helical Staircases", in B.H.V. Topping, Y. Tsompanakis, (Editors), "Proceedings of the Thirteenth International Conference on Civil, Structural and Environmental Engineering Computing", Civil-Comp Press, Stirlingshire, UK, Crete;6 -9 September 2011, Paper 59, 2011. 16p, ISBN: 978-190508845-4doi:10.4203/ccp.96.59

[13] A. Baratta, O. Corbi, “On Variational Approaches in NRT Continua”. Intern. Journal of Solids and Structures, Elsevier Science, 2005. 42: 5307-5321. : 0020-7683. doi:10.1016/j.ijsolstr.2005.03.075

[14] A. Baratta, O. Corbi “The No Tension Model for the Analysis of Masonry-Like Structures Strengthened by Fiber Reinforced Polymers”. Intern. Journal of Masonry International, British Masonry Society. 2003, Vol.16 No.3: 89-98. ISSN 0950-2289

[15] A.Baratta, O.Corbi, "Relationships of L.A. Theorems for NRT Structures by Means of Duality". Intern. Journal of Theoretical and Applied Fracture Mechanics, Elsevier Science. 2005, Vol. 44, pp. 261-274. ISSN0167-8442. Doi:10.1016/j.tafmec.2005.09.008

[16] A.Baratta, O.Corbi, "Stress Analysis of Masonry Vaults and Static Efficacy of FRP Repairs". Intern. Journal of Solids and Structures, Elsevier Science. 2007, Vol.44, No.24, pp. 8028-8056. ISSN: 0020-7683. doi.10.1016/j.ijsolstr.2007.05.024

[17] A.Baratta, O.Corbi, "Duality in Non-Linear Programming for Limit Analysis of NRT Bodies". Structural Engineering and Mechanics, An Intern. Journal. Technopress. 2007, Vol. 26, No. 1, pp. 15-30. ISSN 1225-4568

[18] Baratta A., "Strength capacity of No Tension portal arch-frame under combined seismic and ash loads" Journal of Volcanological and Geothermal Research, 2004, V 133, N 1-4, 30 May. (2004), pp. 369-376, ISSN 0377-0273, DOI: 10.1016/S0377-0273(03)00408-6

[19] A.Baratta, O.Corbi, "On the equilibrium and admissibility coupling in NT vaults of general shape" Int J Solids and Structures, 47(17), 2276-2284, 2010. ISSN: 0020-7683. Doi: 10.1016/j.ijsolstr.2010.02.024

[20] A.Baratta, O.Corbi, "An Approach to Masonry Structural Analysis by the No-Tension Assumption—Part I: Material Modeling, Theoretical Setup, and Closed Form Solutions". Applied Mechanics Reviews, ASME International. Appl. Mech. Rev., July 2010, Vol.63, Issue 4, 040802-1/17 (17 pages). ISSN 0003-6900 doi:10.1115/1.4002790

[21] A.Baratta, O.Corbi, "An Approach to Masonry Structural Analysis by the No-Tension Assumption—Part II: Load Singularities, Numerical Implementation and Applications". Applied Mechanics Reviews, ASME International.Appl. Mech. Rev., July 2010, Vol.63, Issue 4, 040803-1/21 (21 pages). ISSN 0003-6900, doi:10.1115/1.4002791

[22] A.Baratta, O.Corbi, "On the statics of No-Tension masonry-like vaults and shells: solution domains, operative treatment and numerical validation". 2011, Annals of Solid and Structural Mechanics, 2(2-4), pp. 107-122. ISSN 1867-6936, doi: 10.1007/s12356-011-0022-8

[23] A. Baratta, O. Corbi "Analysis of the Dynamics of Rigid Blocks Through the Theory of Distributions", Journal of Advances in Engineering Software, Volume 44, Issue 1 , Feb. 2012, pp. 15-25, Elsevier Science Ltd. ISSN: 0965-9978, doi:10.1016/j.advengsoft.2011.07.008

[24] A. Baratta, I. Corbi, O. Corbi. "Rocking Motion of Rigid Blocks and their Coupling with Tuned Sloshing Dampers". In: B.H.V. Topping, L.F. Costa Neves and R.C. Barros (Eds.) "Proc. of the 12th Conf. on Civil, Structural and Environmental Engineering Computing" (CC2009), 2009, Madeira (Portugal), paper 175, Civil-Comp Press. ISBN 978-1-9050-88-32-4

[25] A.Baratta, I. Corbi "Base isolation for steel structures on stiff and soft soil" Proceedings of the 5th International Conference on Behaviour of Steel Structures in Seismic Areas - Stessa 2006 2006,Yokohama;14 August 2006through17 August 2006; Pages 665-670, ISBN: 0415408245;978-041540824-0

[26] A. Baratta, O. Corbi "On the Optimality Criterion in Structural Control". Intern. Journal of Earthquake Engineering and Structural Dynamics, Wiley & Sons. 2000; 29: 141-157.
[27] A. Baratta, O. Corbi "Dynamic Response and Control of Hysteretic Structures". Intern. Journal of Simulation Modeling Practice and Theory (SIMPAT), Elsevier Science. 2003, Vol.11: 371-385. ISSN: 1569-190X, DOI: 10.1016/S1569-190X(03)00058-3
[28] A. Baratta, I. Corbi "Optimal design of base-isolators in multi-storey buildings". International Journal of Computers & Structures, 2004, vol. 82, Issues 23-26, pp. 2199-2209, Elsevier. ISSN: 00457949 , DOI: 10.1016/j.compstruc.2004.03.061
[29] A. Baratta, I. Corbi "Epicentral Distribution of seismic sources over the territory". International Journal of Advances in Engineering Software, 2004, vol. 35, Issues 10-11, pp. 663-667, Elsevier. ISSN 0965-9978, DOI: 10.1016/j.advengsoft.2004.03.015
[30] A. Baratta, I. Corbi "Evaluation of the Hazard Density Function at the Site". International Journal of Computers & Structures, 2005, vol. 83, Issues 28-30, pp. 2503-2512, Elsevier. ISSN 0045-7949, DOI: 10.1016/j.compstruc.2005.03.038
[31] S.S. Rao, "Optimization: theory and applications". Wiley, E.L., Meerut, India, 1978.