Paper 275

Proceedings of the Eleventh International Conference
on Computational Structures Technology,
B.H.V. Topping, (Editor),
Civil-Comp Press, Stirlingshire, Scotland

The Continuation Method for Dynamic Problems of Frames with Viscoelastic Dampers

R. Lewandowski
Institute of Structural Engineering
Poznan University of Technology, Poland

Abstract

The method for determination of the dynamic characteristics of structures with viscoelastic dampers is presented in this paper. The generalized Maxwell model is used to describe the dynamic behaviour of dampers. The dynamic characteristics are determined as a solution to the nonlinear eigenvalue problem which is a few times as small as the linear eigenvalue problem resulting in the usual formulation. The continuation method is proposed for solving the nonlinear eigenvalue problem. The results of typical calculations are presented in order to show the accuracy and efficiency of the proposed method of analysis.

Keywords: structures with viscoelastic dampers, dynamic characteristics, generalized Maxwell model, nonlinear eigenvalue problem, continuation method.

1 Introduction

Viscoelastic (VE) dampers are often used to mitigate excessive vibrations of structures. The properties of VE materials or fluids used for manufacturing VE dampers depend on the temperature and excitation frequencies of the forces, acting on dampers. Many rheological models, including the classical rheological models and rheological models with fractional derivatives, are proposed for a correct description of the dynamical behavior of VE dampers [1, 2].

The dynamic characteristics of structures with VE dampers, such as natural frequencies, non-dimensional damping ratios and modes of vibrations, can be obtained by solving linear or nonlinear eigenvalue problems. As shown in [1], the linear eigenvalue problem arises when the state-space approach is used whereas the nonlinear eigenvalue problem must be solved if equations of motion are written in a traditional form or the damper model is described using a fractional derivative [2]. The dimension of the linear eigenvalue problem is more than twice as great as the dimension of the nonlinear eigenvalue problem. However, methods of solution to

the nonlinear eigenvalue problems, obtained for VE systems or structures are less common. Some methods are presented in papers [2 – 6] where the Biot model [3], the complex stiffness model [4, 5] and the rheological models with fractional derivatives [2] are used to describe VE materials or dampers. Only in [3] is the method for determination of real eigenvalues and eigenvectors presented. In the method, the equations of motion are transformed to a modal form using the eigenvectors of an undamped system and introducing the small viscoelasticity assumption. In the paper [4] the asymptotic numerical method together with the continuation procedure is proposed for solving the nonlinear eigenvalue problem which appears in the analysis of vibrations of viscoelastic structures.

In the paper, the problem of determination of dynamic characteristics of structures with VE dampers is reduced to the solution of a nonlinear eigenvalue problem of which the dimension is equal to the number of degrees of freedom of the structure. The continuation method with an artificial main parameter is proposed to solve the problem mentioned above. Only complex solutions, which are most important in practice, are determined in this way.

2 Problem formulation

2.1 Rheological model of VE damper

In this paper, the generalized Maxwell model, shown in Fig. 1, is used to describe the behaviour of the VE damper. The model is rather general and contains a number of particular models, such as the very popular viscous model, the simple Kelvin model and the simple Maxwell model**.** The model considered contains the spring, the dashpot in parallel, which both constitute the simple Kelvin element and m-th Maxwell elements connected in parallel (see Fig. 1).

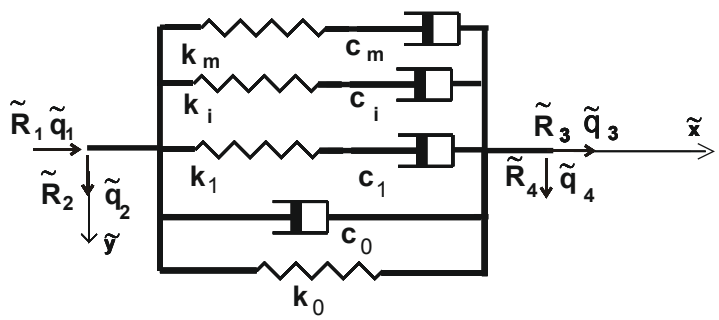

Figure 1: Rheological model of VE damper

According to this model, the total force in damper $u(t)$ is a sum of forces in elements $u_i(t)$, i.e.:

$$u(t) = \sum_{i=0}^{m} u_i(t) \ . \tag{1}$$

The force in the simple Kelvin element is given by

$$u_0(t) = k_0 \Delta q(t) + c_0 \Delta \dot{q}(t) \ , \tag{2}$$

while the force in the i-th Maxwell element is governed by the following equation:

$$\nu_i u_i(t) + \dot{u}_i(t) = k_i \Delta \dot{q}(t) \ , \tag{3}$$

where $\nu_i = k_i / c_i$ and k_0, k_i, c_0, c_i, $(i = 1,2,...,m)$ denote the stiffness and damping coefficients (see Fig.1), respectively. Moreover, $\Delta q(t) = \tilde{q}_3(t) - \tilde{q}_1(t)$ is the relative displacement of damper (see Fig. 1).

Applying the Laplace transform, Equations (1) – (3) take the following form:

$$\bar{u}_0(s) = k_0 \Delta \bar{q}(s) + s\, c_0 \Delta \bar{q}(s) \ , \qquad \bar{u}_i(s) = \frac{k_i s}{\nu_i + s} \Delta \bar{q}(s) \ , \tag{4}$$

$$\bar{u}(s) = \sum_{i=0}^{m} \bar{u}_i(s) = \left(k_0 + s\, c_0 + \sum_{i=1}^{m} \frac{k_i s}{\nu_i + s} \right) \Delta \bar{q}(s) \ , \tag{5}$$

where such quantities as $\bar{u}(s)$ denote the Laplace transforms of $u(t)$ and s is the Laplace variable.

2.2 Equations of motion of structure with VE dampers

The equation of motion of structure with VE dampers could be written in the following form:

$$\mathbf{M}\ddot{\mathbf{q}}(t) + \mathbf{C}\dot{\mathbf{q}}(t) + \mathbf{K}\mathbf{q}(t) = \mathbf{p}(t) + \mathbf{f}(t) \ , \tag{6}$$

where $\mathbf{M}, \mathbf{C}, \mathbf{K}$ are the $(n \times n)$ mass, damping and stiffness matrices of structure, respectively. Moreover, $\mathbf{q}(t), \mathbf{p}(t), \mathbf{f}(t)$ are the $(n \times 1)$ vectors of displacements, excitation forces and the vector of interaction forces between the structure and dampers. The dot denotes differentiation with respect to time t. The vector of interaction forces is a sum of vectors $\mathbf{f}_k(t)$ which is caused by *k*-th damper, i.e.:

$$\mathbf{f}(t) = \sum_{k=1}^{r} \mathbf{f}_k(t) \ , \tag{7}$$

where r is the total number of dampers.

Applying the Laplace transform, the equation of motion (6) can be written as:

$$(s^2 \mathbf{M} + s\mathbf{C} + \mathbf{K})\, \bar{\mathbf{q}}(s) = \bar{\mathbf{p}}(s) + \bar{\mathbf{f}}(s) \ , \tag{8}$$

and

$$\bar{\mathbf{f}}(s) = \sum_{k=1}^{r} \bar{\mathbf{f}}_k(s) \ . \tag{9}$$

First of all, the interaction forces caused by the k-th damper were considered. In the global coordinate system, the vector of interactive forces caused by a single damper could be written in the form:

$$\bar{\mathbf{f}}_k(s) = -\left(k_{0k} + s\, c_{0k} + s\sum_{i=1}^{m_k} G_{ik}(s) \right) \mathbf{L}_k \bar{\mathbf{q}}(s) \ , \tag{10}$$

where $\mathbf{L}_k$ is the $(n \times n)$ global location matrix of k-th damper and

$$G_{ik}(s) = \frac{k_{ik}}{v_{ik} + s} \ . \tag{11}$$

If a planar frame is the structure under consideration and the finite element method is used to model the structure, then the matrix $\mathbf{L}_k$ is built on the base of the matrix $\widetilde{\mathbf{L}}_k$ which is the transformation matrix of damper from a local to the global coordinate system, i.e.:

$$\widetilde{\mathbf{L}}_k = \begin{bmatrix} \widetilde{c}^2 & \widetilde{c}\widetilde{s} & -\widetilde{c}^2 & -\widetilde{c}\widetilde{s} \\ \widetilde{c}\widetilde{s} & \widetilde{s}^2 & -\widetilde{c}\widetilde{s} & -\widetilde{s}^2 \\ -\widetilde{c}^2 & -\widetilde{c}\widetilde{s} & \widetilde{c}^2 & \widetilde{c}\widetilde{s} \\ -\widetilde{c}\widetilde{s} & -\widetilde{s}^2 & \widetilde{c}\widetilde{s} & \widetilde{s}^2 \end{bmatrix} , \tag{12}$$

where $\widetilde{c} = \cos\alpha$, $\widetilde{s} = \sin\alpha$ and α is the angle between the global and local coordinate systems. If the share frame is a model of structure and the damper is located between the storeys number $j+1$ and j, then $\mathbf{L}_k = \mathbf{e}_k \mathbf{e}_k^T$, where the $(n \times 1)$ allocation vector is $\mathbf{e}_k = col(0,...,e_j = 1, e_{j+1} = -1,...,0)$.

The total vector of interactive forces is

$$\bar{\mathbf{f}}(s) = -(\mathbf{K}_d + s\mathbf{C}_d)\bar{\mathbf{q}}(s) - s\sum_{k=1}^{r}\sum_{i=1}^{m_k} G_{ik}(s)\, \mathbf{L}_k \bar{\mathbf{q}}(s) \ , \tag{13}$$

where

$$\mathbf{K}_d = \sum_{k=1}^{r} k_{0k} \mathbf{L}_k \ , \qquad \mathbf{C}_d = \sum_{k=1}^{r} c_{0k} \mathbf{L}_k \tag{14}$$

The final form of equation of motion, written in the frequency domain, is:

$$\left(s^2\mathbf{M} + s\mathbf{C} + s\mathbf{C}_d + \mathbf{K} + \mathbf{K}_d + s\sum_{k=1}^{r}\sum_{i=1}^{m_k} G_{ik}(s)\, \mathbf{L}_k \right) \bar{\mathbf{q}}(s) = \bar{\mathbf{p}}(s) \ . \tag{15}$$

From Equation (15), the dynamic characteristics of structures with VE dampers, such as natural frequencies, non-dimensional damping ratios and modes of vibrations, can be determined after assuming that $\bar{\mathbf{p}}(s) = \mathbf{0}$. Equation (15) is the nonlinear eigenvalue problem. The number of eigenvalues and eigenvectors is

$2n+\sum_{k=1}^{r} m_k$. In the case of small damping, $2n$ eigenvalues and eigenvectors are complex conjugate numbers and vectors, respectively. The remaining eigenpairs are real numbers and vectors. The complex eigenvectors together with their complex conjugates are sometimes called vibration modes while the real eigenvectors are called viscous modes or overdamped modes (see [7]).

Given the complex conjugate eigenvalues $s_j = \mu_j + \mathrm{i}\,\eta_j$ and $s_{j+n} = \mu_j - \mathrm{i}\,\eta_j$, natural frequencies of vibration ω_j and non-dimensional damping ratios γ_j can be calculated from the following formulae:

$$\omega_j^2 = \mu_j^2 + \eta_j^2 \ , \qquad \gamma_j = -\mu_j / \omega_j \ . \tag{16}$$

Introducing the so-called internal variables and applying the state space approach, the considered problem can also be formulated in such a way that the linear eigenvalue problem is obtained instead of the nonlinear one. The approach was presented in [1]. However, the dimension of the linear eigenvalue problem is approximately three times as great.

3 The continuation method

The continuation method, also termed as the path following method or the homotopy method, is frequently used to solve nonlinear equations with parameter, occurring in many problems of modern mechanics. The static analysis of geometrically or/and physically nonlinear structures (see [8]) and the analysis of large-amplitude free and steady state vibrations [9, 10] are examples of such problems. A general description of the continuation method can be found, for example, in [11].

In the continuation method, the set of nonlinear equations with one parameter, also called the main parameter, is considered. Here, an artificial main parameter κ, ($0 \le \kappa \le 1$) is introduced and the above-mentioned set of equations is:

$$\mathbf{h}_1(\overline{\mathbf{q}}, s) = \left(s^2\mathbf{M} + \kappa\, s\mathbf{C} + \kappa\, s\mathbf{C}_d + \mathbf{K} + \mathbf{K}_d + \kappa\, s \sum_{k=1}^{r}\sum_{i=1}^{m_k} G_{ik}(s)\,\mathbf{L}_k \right)\overline{\mathbf{q}} = \mathbf{0} \ , \tag{17}$$

$$h_2(\overline{\mathbf{q}}, s) = \tfrac{1}{2}\overline{\mathbf{q}}^T \mathbf{H}_{qs}(\overline{\mathbf{q}}, s) - a = 0 \ , \tag{18}$$

where a is given value and

$$\mathbf{H}_{qs}(\overline{\mathbf{q}}, s) = \frac{\partial \mathbf{h}_1}{\partial s} = \left(2s\mathbf{M} + \kappa\,\mathbf{C} + \kappa\,\mathbf{C}_d + \kappa \sum_{k=1}^{r}\sum_{i=1}^{m_k} G_{ik}(s)\,\mathbf{L}_k + \kappa\, s \sum_{k=1}^{r}\sum_{i=1}^{m_k} \frac{\partial G_{ik}(s)}{\partial s}\mathbf{L}_k \right)\overline{\mathbf{q}} \ , \tag{19}$$

$$\frac{\partial G_{ik}(s)}{\partial s} = -\frac{k_{ik}}{(v_{ik} + s)^2} \ . \tag{20}$$

Equation (18) may be considered as a way of normalization of the eigenvector $\overline{\mathbf{q}}$. Moreover, in this way, the symmetry of incremental equations which will be derived later is preserved. A solution to the original problem (15) is obtained when $\kappa = 1$.

The lower limit of κ is chosen to be equal to zero because, for this value of κ, Equation (17) is reduced to the following linear eigenvalue problem:

$$\left(s_0^2\mathbf{M}+\mathbf{K}+\mathbf{K}_d\right)\overline{\mathbf{q}}_0=\mathbf{0}\ , \tag{21}$$

which can be solved numerically using the standard procedure. Please note that the matrix $\mathbf{K}_d$, which takes into account part of the stiffness properties of dampers, appears in Equation (21). Moreover, the values of parameter a could be specified from relationship $a=s_0\overline{\mathbf{q}}_0^T\mathbf{M}\overline{\mathbf{q}}_0$.

The solution to Equation (21) provides a good starting point for determination of a complex conjugate solution to the original problem (15). One solution from a set of solutions to the linear eigenvalue problem (21) is chosen for which the continuation method has been applied and two curves $s(\kappa)$ and $\overline{\mathbf{q}}(\kappa)$ will be numerically determined for a set of values of κ. The incremental – iterative procedure will be used to determine the above mentioned curves. A notation like $s_r(\kappa)$ and $\overline{\mathbf{q}}_r(\kappa)$ is used to denote the values of $s(\kappa)$ and $\overline{\mathbf{q}}(\kappa)$ for $\kappa=\kappa_r$.

Based on the solution obtained for a certain value of parameter $\kappa=\kappa_r$ a solution is sought for a new value of this parameter $\kappa_{r+1}=\kappa_r+\Delta\kappa$, where $\Delta\kappa$ is the assumed increment of κ. The approximate solution to a new value of parameter κ, obtained at the iteration step i, will be denoted $s_{r+1}^{(i)}$ and $\overline{\mathbf{q}}_{r+1}^{(i)}$. In the first iteration step, the solution obtained for κ_r is used, i.e., s $s_{r+1}^{(1)}=s_r$ and $\overline{\mathbf{q}}_{r+1}^{(1)}=\overline{\mathbf{q}}_r$.

The incremental equations of the Newton method, associated with Equations (17) and (18), are in the following form:

$$\mathbf{H}_{qq}\delta\,\overline{\mathbf{q}}+\mathbf{H}_{qs}\delta\,s=-\mathbf{h}_1\ , \qquad \mathbf{H}_{sq}\delta\,\overline{\mathbf{q}}+H_{ss}\delta\,s=-h_2\ , \tag{22}$$

where

$$\mathbf{H}_{qq}=\frac{\partial\mathbf{h}_1}{\partial\overline{\mathbf{q}}}=s^2\mathbf{M}+\kappa\,s\,\mathbf{C}+\kappa\,s\,\mathbf{C}_d+\mathbf{K}+\mathbf{K}_d+\kappa\,s\sum_{k=1}^{r}\sum_{i=1}^{m_k}G_{ik}(s)\,\mathbf{L}_k\ ,$$

$$\mathbf{H}_{sq}=\frac{\partial h_2}{\partial\overline{\mathbf{q}}}=\overline{\mathbf{q}}^T\left(2s\,\mathbf{M}+\kappa\,\mathbf{C}+\kappa\,\mathbf{C}_d+\kappa\sum_{k=1}^{r}\sum_{i=1}^{m_k}G_{ik}(s)\,\mathbf{L}_k+\kappa\,s\sum_{k=1}^{r}\sum_{i=1}^{m_k}\frac{\partial G_{ik}(s)}{\partial s}\mathbf{L}_k\right),$$

$$H_{ss}=\frac{\partial h_2}{\partial s}=\tfrac{1}{2}\overline{\mathbf{q}}^T\left(2\mathbf{M}+2\kappa\sum_{k=1}^{r}\sum_{i=1}^{m_k}\frac{\partial G_{ik}(s)}{\partial s}\mathbf{L}_k+\kappa\,s\sum_{k=1}^{r}\sum_{i=1}^{m_k}\frac{\partial^2 G_{ik}(s)}{\partial s^2}\mathbf{L}_k\right)\overline{\mathbf{q}}\ ,$$

$$\frac{\partial^2 G_{ik}(s)}{\partial s^2}=\frac{2k_{ik}}{(v_{ik}+s)^3}\ . \tag{23}$$

The new approximation of the solution is obtained after solving the set of Equations (22) with respect to $\delta\,\overline{\mathbf{q}}$ and $\delta\,s$ and using the following formulae:

$$s_{r+1}^{(i)}=s_{r+1}^{(i-1)}+\delta\,s\ , \qquad \overline{\mathbf{q}}_{r+1}^{(i)}=\overline{\mathbf{q}}_{r+1}^{(i-1)}+\delta\overline{\mathbf{q}}\ . \tag{24}$$

The iteration process is finished when

$$\left|\delta s\right| < \varepsilon_1 \left|s_{r+1}^{(i)}\right| \ , \qquad \left\|\delta\overline{\mathbf{q}}\right\| < \varepsilon_2 \left\|\overline{\mathbf{q}}_{r+1}^{(i)}\right\| \ , \tag{25}$$

where ε_1 and ε_2 are the assumed accuracies of calculations.

The continuation method has good convergence properties. For $\varepsilon_1 = \varepsilon_2 = 0.00001$, one or two incremental steps and three or four iterations in the incremental step are enough to reach a solution.

However, at the present stage of development the proposed method has one important drawback. The method fails in attempts to determine the response curves $s(\kappa)$ and $\overline{\mathbf{q}}(\kappa)$ starting with real values of s_0 and $\overline{\mathbf{q}}_0$.

4 Results of a typical calculation

A six-storey share frame is selected to determine the dynamic characteristics of a structure with dampers. The mass of each storey of structure is 90000.0 kg. The storeys are of the following stiffnesses: $k_{1,s} = k_{2,s} = 1.2 \times 10^8$ N/m, $k_{3,s} = k_{4,s} = 1.0 \times 10^8$ N/m, $k_{5,s} = k_{6,s} = 0.8 \times 10^8$ N/m. The damping properties of the structure are neglected.

Six VE dampers are on the structure, one on each storey. The generalized Maxwell model with eight parameters is used as a model of damper. All dampers have identical parameters, as shown in Table 1.

Stiffness $(\times 10^6)\left[N/m\right]$		Damping factor $(\times 10^6)\left[N\,\mathrm{sec}/m\right]$	
k_0	0.2130	c_0	0.000
k_1	66.770	c_1	2.957
k_2	6.6210	c_2	3.463
k_3	2.886	c_3	16.610

Table 1 Parameters of the generalized Maxwell model

Results of calculation are summarized in Table 2. A significant influence of VE dampers on natural frequencies is observed. The first three natural frequencies increase by about 9%, 26% and 31%, respectively. Please note that nondimensional damping ratios of first two modes are of the order of 10% and they are greater than the remaining damping ratios.

The considered problem was also solved using the state space approach, in which the problem could be reduced to the following linear eigenvalue problem (see [1] for details):

$$(s\mathbf{A}+\mathbf{B})\,\mathbf{a}=\mathbf{0}\ , \tag{26}$$

where $\mathbf{a}$ is the eigenvector and the matrices $\mathbf{A}$ and $\mathbf{B}$ are appropriately built from the mass, stiffness and damping matrices of the frame with VE dampers.

The solution to the linear eigenvalue problem is presented in Table 3.

Comparing the results in Table 2 and 3, it is concluded that almost identical values of complex, conjugate eigenvalues are obtained as the solution to the nonlinear (15) and linear (26) eigenvalue problems. The real solutions to linear eigenvalue problem (26) reflect the dampers' dynamics and could be divided into three groups. The values of real eigenvalues in one group are of the order of inverse relaxation times of Maxwell elements which is: $k_3/c_3=0.174$, $k_2/c_2=1.91$ and $k_1/c_1=22.58$, respectively.

	Frequencies of frame without dampers [rad/sec]	Frame with dampers		
		Complex eigenvalues	Frequency [rad/sec]	Damping ratio
1	8.35405	-0.94354 + i 9.04467	9.09375	0.103757
2	23.3784	-3.50908 + i 29.2854	29.4949	0.118973
3	37.4414	-4.04305 + i 48.8769	49.0438	0.082438
4	49.6335	-4.14593 + i 65.0887	65.2206	0.063568
5	59.5951	-4.14252 + i 78.1702	78.2798	0.052919
6	68.0692	-3.93662 + i 87.4849	87.5734	0.044951

Table 2 Results of calculation – complex eigenvalues

5 Concluding remarks

In this paper a method of determination of the dynamic characteristics of structures with VE dampers modelled with the help of the generalized Maxwell model is presented. The Maxwell model considered contains, in particular, very popular models such as the viscous model, the simple Kelvin model and the simple Maxwell model among other ones.

The problem considered is reduced to the nonlinear eigenvalue problem which is more than two times as small as the linear eigenvalue problem obtained using the state space approach. The continuation method which is an incremental – iterative method is adopted to find the complex eigenvalues and eigenvectors. The proposed incremental – iterative procedure is very fast. However, in the present stage of

development only the complex solutions to nonlinear eigenvalue problem can be found. The proposed method is quite general because it can be used to solve nonlinear eigenvalue problems of different types, including the quadratic eigenvalue problems which very often appear in many instances.

Complex eigenvalues	Real eigenvalues		
$-0.94354 \pm 9.04467\,\mathrm{i}$	-0.167633	-1.76238	-13.5729
$-3.50910 \pm 29.2853\,\mathrm{i}$	-0.168832	-1.79067	-14.4332
$-4.04316 \pm 48.8769\,\mathrm{i}$	-0.168833	-1.79108	-14.9484
$-4.14605 \pm 65.0887\,\mathrm{i}$	-0.168834	-1.79317	-15.1556
$-4.14265 \pm 78.1702\,\mathrm{i}$	-0.168839	-1.81012	-15.8474
$-3.93662 \pm 87.4849\,\mathrm{i}$	-0.168840	-1.81226	-20.8232

Table 3 Solutions to the eigenvalue problem (26)

Acknowledgments

The authors wish to acknowledge the financial support received from the Poznan University of Technology (Grant No. DS 11 - 088/12) in connection with this work.

References

[1] R. Lewandowski, A. Bartkowiak, H. Maciejewski, “Dynamic analysis of frames with viscoelastic dampers: a comparison of damper models”, Structural Engineering and Mechanics, 41(1), 113-137, 2012.

[2] R. Lewandowski, Z. Pawlak, “Dynamic analysis of frames with viscoelastic dampers modelled by rheological models with fractional derivatives”, Journal of Sound and Vibration, 330, 923–936, 2011.

[3] S. Adhikari, “A reduced second-order approach for linear viscoelastic oscillators”, Journal of Applied Mechanics, 77, 041003-1-7, 2010.

[4] E.M. Daya, M. Potier-Ferry, “A numerical method for nonlinear eigenvalue problems and application to vibrations of viscoelastic structures”, Computers and Structures, 79, 533-541, 2001.

[5] F. Cortes, M.J. Elejabarrieta, “An approximate numerical method for the complex eigenproblem in systems characterised by a structural damping matrix”, Journal of Sound and Vibration 296, 166–182, 2006.

[6] U. Miller, S. Bograd, A. Schmidt and L. Gaul, “Eigenpath following for systems with symmetric complex-valued stiffness matrices”, Shock and Vibration 17, 397–405, 2010.
[7] S. Adhikari, B. Pascual, “Eigenvalues of linear viscoelastic systems”, Journal of Sound and Vibration 325, 1000–1011, 2009.
[8] E. Riks, “Some computational aspects of the stability analysis of nonlinear structures”, Computer Methods in Applied Mechanics and Engineering 47, 219–259, 1984.
[9] R. Lewandowski, “Solutions with bifurcation points for free vibrations of beams – an analytical approach”, Journal of Sound and Vibration 177, 239–249, 1994.
[10] R. Lewandowski, “Computational formulation for periodic vibration of geometrically nonlinear structures”, International Journal of Solids and Structures, 34, 1925–1964, 1997.
[11] R. Seydel, “From Equilibrium to Chaos. Practical Bifurcation and Stability Analysis”, Elsevier, New York, 1988.