Paper 207

Proceedings of the Eleventh International Conference
on Computational Structures Technology,
B.H.V. Topping, (Editor),
Civil-Comp Press, Stirlingshire, Scotland

Topology Optimization for the Case of Probabilistic Loading

J. Lógó, E. Pintér and D.B. Merczel
Department of Structural Mechanics
Budapest University of Technology and Economics, Hungary

Abstract

To describe the load three independent data are necessary: the magnitude, the line of action and the point of application. If any part among these data contains uncertain information the more precise design requires a probabilistic method to elaborate the design procedure. Here a new type of probabilistic optimal topology design method is elaborated where the points of application of the loads are given randomly. In the proposed probabilistic topology optimization method the minimum penalized weight design of the structure is subjected to a compliance constraint and side constraints. The compliance expression is a probabilistic one. By the use of an appropriate approximation, the original stochastic mathematical programming problem is substituted by a deterministic one. The numerical procedure is based on an iterative formula which is formed by the use of the first order optimality condition of the Lagrangian function. The application is illustrated using numerical examples.

Keywords: topology optimization, probability, stochastic loading, optimality criteria method, optimal design, robust design.

1 Introduction

The topology optimization has more than 100 years of history and still it is an expanding field in structural optimization. The numerical procedure for FE (finite element) based topology optimization was elaborated first by Rossow and Taylor [18] in 1973, but the real expansion started at the end of 80-s [3, 19]. The majority of the papers still deals with deterministic problems. During these years several optimal topologies were numerically calculated but the analytical confirmations – which have come recently (Sokół et. al [20]) – are mostly missing. Until the end of the last century almost one could not find any publication on topology optimization considering uncertainties. Exceptions to this most often use multiple load or reliability constraints. Uncertainty is typically limited to the loading, although recent works have considered extensions to support conditions and material properties.

During the last years before the millennium almost there were no publications in the topic of probability based topology optimization. The stochastic optimization works of Marti and Stöckl [15, 16] provide early information about this topic. The paper of Duan et al. [4] is among the very first publications in the field of uncertainty based topology optimization. This work presents an entropy-based topological optimization method for truss structures by the use of iteration technique. Dunning et al. [5, 6] introduce an efficient and accurate approach to robust structural topology optimization. The objective is to minimize expected compliance with uncertainty in loading magnitude and applied direction, where uncertainties are assumed normally distributed and statistically independent. This approach is analogous to a multiple load case problem where load cases and weights are derived analytically to accurately and efficiently compute expected compliance and sensitivities. Illustrative examples using a level-set-based topology optimization method are then used to demonstrate the proposed approach.

Topology optimization with uncertainty in the magnitude and locations of the applied loads and with small uncertainty in the locations of the structural nodes is the object of the paper of Guest and Igusa [7]. Their method is based on the assumption that the loading uncertainties are taken into consideration as "safety factors" of the deterministic load cases in the load combination. The effects of geometric uncertainty were estimated using second order stochastic perturbation and uncertainties in the stiffness of the structure were transformed into a mathematically equivalent system of auxiliary loads. This technique is extended for nonlinear effects of global instability [8] and material property uncertainties [1], to put more control on the variability of the final design via including variance of the compliance [2]. Asadpoure et al. [2] present a computational strategy that combines deterministic topology optimization techniques with a perturbation method for the quantification of uncertainties associated with structural stiffness, such as uncertain material properties and/or structure geometry. The applied technique leads to significant computational savings when compared with Monte Carlo-based optimization algorithms. Jalalpour et al. [8] extend the perturbation based topology optimization procedure [7] to approximate the effect of random geometric imperfections on the second order response of trusses. Monte Carlo simulation together with second-order elastic analysis is used to verify that solutions offer improved performance in the presence of geometric uncertainties.

Lógó [12] and Lógó et al. [11, 13] elaborated a rather powerful method for the stochastic topology optimization where the magnitude of the loads or the compliance bounds are given by their mean values, covariances and distribution functions. By the use of direct integration technique for the calculation of the uncertain bounds or applying an appropriate approximation for the loading uncertainties the stochastic expressions are substituted by an equivalent deterministic ones to make the optimization problem robust. The loading positions as uncertain data in the topology optimization problem is considered in [14]. Here two computational models and the corresponding algorithms are elaborated. Both models use simple transformations to substitute the original load position problem

with uncertain loading magnitude ones. This work is a continuation of the above cited papers.

In this paper the uncertainties of the load positions are considered. By the use of a simple simulation technique and the stochastic upperbound theorem of Kataoka [9] a generalized compliance design problem is elaborated. The uncertain quantities are substituted by their statistical measures. To solve this constrained mathematical programming problem an iterative solution technique is derived by the use of the optimality criteria method. Several numerical examples are presented and compared.

2 Mathematical and mechanical background

2.1 Approximation of a Probabilistic Expression

According to the approximation theory of Kataoka [9] a stochastic expression can be upperbounded by a convex deterministic one. From the literature the generalization of this theory is known by Prekopa [17]. The outline of this method can be explained as follow: if $\xi_1, \xi_2, ..., \xi_n$ have a joint normal distribution, then the set of $\mathbf{x} \in \Re^n$ vectors satisfying

$$\mathrm{P}(x_1\xi_1 + x_2\xi_2 + ... + x_n\xi_n \leq 0\ ) \geq q \tag{1}$$

is the same as those satisfying

$$\sum_{\mathrm{i=1}}^{\mathrm{n}} x_i\mu_i + \Phi^{-1}(q)\sqrt{\mathbf{x}^T\mathbf{K}_{\mathrm{ov}}\mathbf{x}} \leq 0 \tag{2}$$

where $\mu_i = E(\xi_i)$, $(i = 1, 2, ..., n)$ is the mean value of the randomly given element ξ_i, $\mathbf{K}_{\mathrm{ov}}$ is the covariance matrix of the random vector $\boldsymbol{\xi}^T = (\xi_1, \xi_2, ..., \xi_n)$, q is a fixed probability and $0 \langle q \langle 1$, $\Phi^{-1}(q)$ is the inverse cumulative distribution function (so called probit function) of the normal distribution. Expression (2) is convex, the proof can be found in Prekopa [17]. According the original approximation theory of Kataoka the probit function is substituted by an appropriate constant and the Gaussian distribution is not a requirement.

In the following the above theory of Prekopa is applied.

2.2 Probabilistic Compliance Design

The deterministic compliance design procedure of a linearly elastic 2D structure (disk) in plane stress is known from literature (e.g. (Rozvany[19,] Lógó [10]). This topology optimization problem is given as follows:

$$W = \sum_{g=1}^{G} \gamma_g A_g t_g^{\frac{1}{p}} = \min! \tag{3.a}$$

subject to

$$\begin{cases} \mathbf{u}^{\mathrm{T}}\mathbf{F} - C \le 0; \\ -t_g + t_{\min} \le 0; \quad \left(for\, g = 1,...,G\right), \\ t_g - t_{\max} \le 0; \quad \left(for\, g = 1,...,G\right). \end{cases} \tag{3.b-d}$$

Here the ground element thicknesses t_g are the design variables with lower bound $t_{\min}$ and upper bound $t_{\max}$, respectively. By the use of the FE (finite elements) discretization, each ground element (g= *1,..., G*) contains several sub-elements (e=*1,..,* E_s), whose stiffness coefficients are linear homogeneous functions of the ground element thickness t_g. Furthermore γ_g is the specific weight and A_g the area of the ground element *g*. $\mathbf{u}^{\mathrm{T}}$ is the nodal displacement vector associated with the loading **F**. The displacements **u** can be calculated from $\mathbf{Ku} = \mathbf{F}$, where **K** is the system stiffness matrix. *p* is the penalty parameter ($p \ge 1$) and the given compliance value is denoted by *C*. The above constrained mathematical programming problem can be solved by the use of an appropriate SIMP algorithm (Lógó[10]).

Let us suppose that the structure (the design domain) and the boundary conditions (supports and loadings) are given (Figure 1.). The material is linearly elastic. The loading is given by deterministic (magnitude and direction) and probabilistic (point of application) data. The different uncertain locations are given by x_i, (i=*1,..,n*) where the external loads $\mathbf{F}^{\mathrm{T}} = \left[\mathbf{f}_1, \mathbf{f}_2, ..., \mathbf{f}_i, ..., \mathbf{f}_n\right]$ act. The distance of the load vector $\mathbf{f}_i$ indicated by x_i as point of application (Figure 1) follows a given distribution – for sake of simplicity Gaussian one. Because the precise value of x_i is not known, x_i is given by its mean value $\overline{x}_i$ and standard deviation σ_i. Due to the stochastic nature of the point of application of the loads the compliance calculation is difficult and the topology optimization can not be elaborated easily. The displacements are probabilistic.

As it is known, the compliance value can be calculated as:

$$\mathbf{u}^T\mathbf{F} = u_1 f_1 + u_2 f_2 + ... + u_n f_n \tag{4}$$

where the displacements (u_i, $i = 1,...,n$) are obtained from $\mathbf{Ku} = \mathbf{F}$ linear system and denote the displacement under the force $\mathbf{f}_i$ $\left(i = 1,...,n\right)$ in the direction of this load. $f_i = \left|\mathbf{f}_i\right|$ $\left(i = 1,...,n\right)$ is a deterministic value and due to the stochastic nature of the point of applications x_i (i=*1,..,n*) the displacements u_i $(i = 1,...,n)$ are probabilistic.

By the use of a generalized compliance design concept (Lógó [12]) a new constraint

$$\mathrm{P}\left(\mathbf{u}^T\mathbf{F} - C \le 0\right) \ge q \tag{5}$$

can be introduced instead of eq.(3.b). Here $0\langle q\langle 1$ is the given probability value. Following the upperbound theorem of Kataoka [9] and the generalization theorem of Prekopa [17] introduced above eq.(5) can be substituted by the following deterministic expression which is convex:

$$\sum_{i=1}^{n} f_i\overline{u}_i - C + \Phi^{-1}\left(q\right)\sqrt{\mathbf{b}^{\mathrm{T}}\mathbf{K}_{\mathrm{ov}}\mathbf{b}} \le 0. \tag{6}$$

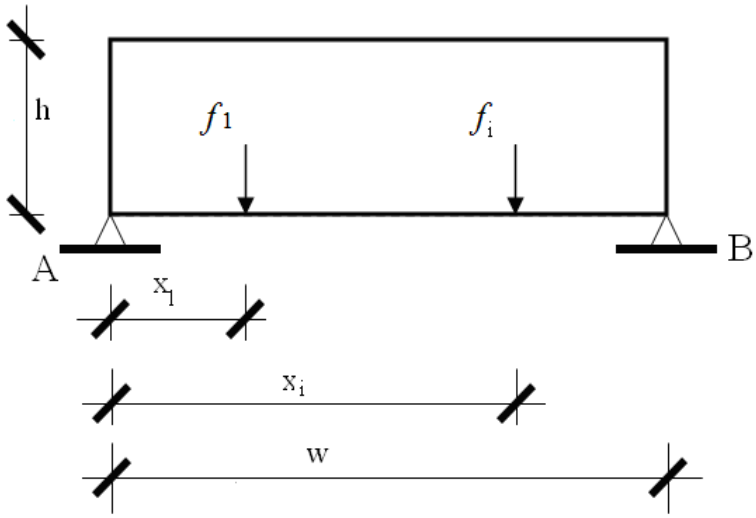

Figure 1. The design domain with the boundary conditions

Here $\overline{u}_i = E(u_i),\ i = 1,...,n$ is the expected value of the displacement under the force $\mathbf{f}_i\ \left(i = 1,...,n\right)$ in the direction of this load, $\mathbf{b}^{\mathrm{T}} = \left[f_1, f_2, ..., f_i, ..., f_n\right]$, $\mathbf{K}_{\mathrm{ov}}$ is the covariance matrix of these displacements. The expected displacement value $\overline{u}_i = E(u_i)\ (i = 1,...,n)$ and the corresponding elements $\kappa_{i,j}\ \left(i = 1,...,n;\ j = 1,...,n\right)$ of the covariance matrix $\mathbf{K}_{\mathrm{ov}}$ can be computed as the result of a certain type of simulation.

Then the penalized minimum weight problem subjected to probabilistic compliance constraint has the form:

$$W = \sum_{g=1}^{G} \gamma_g A_g t_g^{\frac{1}{p}} = \min! \tag{7.a}$$

subject to
$$\begin{cases} \sum_{i=1}^{n} f_i \overline{u}_i - C + \Phi^{-1}(q)\sqrt{\mathbf{b}^{\mathrm{T}}\mathbf{K}_{\mathrm{ov}}\mathbf{b}} \le 0; \\ -t_g + t_{\min} \le 0; \quad (for\ g = 1,\ldots,G), \\ t_g - t_{\max} \le 0; \quad (for\ g = 1,\ldots,G). \end{cases} \tag{7.b}$$

3 Probabilistic Compliance Design in the Case of Uncertain Loading Positions: Simplified Simulation

Let us consider the design problem given in Figure 1. Since the loading positions are not known precisely an equivalent loading system should be also created around the expected location $\overline{x}_i$ of each force $\mathbf{f}_i$ to perform the simulation. According to the original distribution assumption – here it is Gaussian –, the mean value and the standard deviation of the point application are determined by the force system f_{ij} $(j = 1,..,k)$ with the original magnitude f_i - for sake of simplicity here seven points – as "based" points are used with symmetrical adjustment $(f_{i1}, f_{i2}, f_{i3}, f_{i4})$. Each load is independent and a well-defined probability value p_{ij} $(j = 1,..,k = 7)$ is assigned to them. The determination of this probability value p_{ij} $(j = 1,..,k)$ is based on the original distribution and it can be calculated with a simple computation. The modified topology design problem is given in Figure 2.

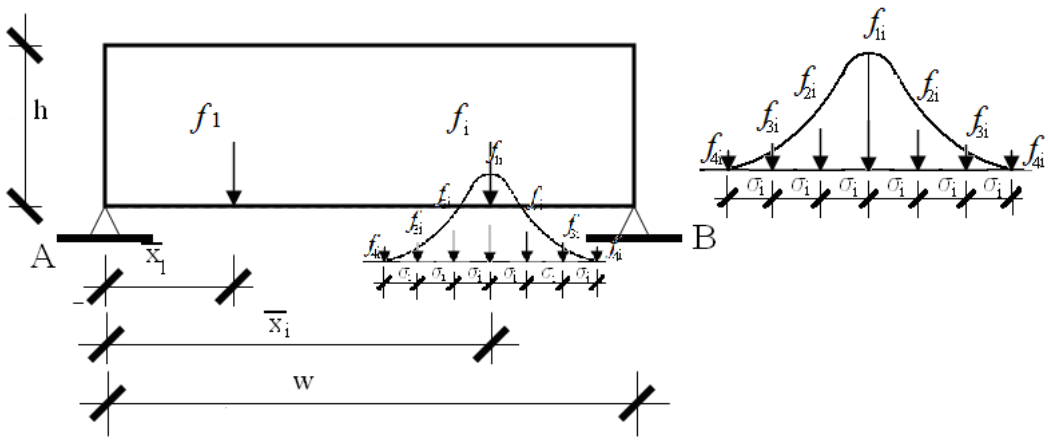

Figure 2. The design domain with the modified loadings

Applying these forces at "base" points as loads the stochastic design problem becomes a deterministic one after this transformation. By the use of the element f_{ij} $(j = 1,..,k)$ of these force system one by one the displacement vectors $\mathbf{u}_{ij}$ $(j = 1,..,k)$ can be calculated from the $\mathbf{K}\mathbf{u}_{ij} = \mathbf{f}_{ij}$ linear equations. Since the material is linearly elastic the additive properties of the displacements and the reciprocity theorem can be applied. Using these vectors and the assigned probability

values p_{ij} $(j=1,..,k)$ the expected displacement $\overline{u}_i$ and its variation $D^2\left(\overline{u}_i\right)$ can be calculated in the following form:

$$\overline{\mathbf{u}}_i = \sum_{j=1}^{k} \mathbf{u}_{ij} p_j \,; \tag{8.a}$$

$$D_i^2\left(\overline{u}_i\right) = \sum_{j=1}^{k} \left(u_{ij}\right)^2 p_j - \overline{u}_i^2 \,. \tag{8.b}$$

These computed values are used to compose the element of the mathematical programming problem eq.(7). Due to the nature of this type of loading the covariance matrix is diagonal.

$$\mathbf{K}_{\text{ov}} = \left\langle D_1^2\left(\overline{u}_1\right), D_2^2\left(\overline{u}_2\right), ..., D_n^2\left(\overline{u}_n\right)\right\rangle \tag{9}$$

Interchanging the expected compliance calculation by the generalized expected strain energy formulation the penalized minimum weight problem subjected to probabilistic compliance constraint has the form:

$$W = \sum_{g=1}^{G} \gamma_g A_g t_g^{\frac{1}{p}} = \min! \tag{10.a}$$

subject to
$$\begin{cases} \sum_{i=1}^{n} \overline{\mathbf{u}}_i^T \mathbf{K} \mathbf{u}_i - C + \Phi^{-1}\left(q\right)\sqrt{\mathbf{b}^T \mathbf{K}_{\text{ov}} \mathbf{b}} \le 0; \\ -t_g + t_{\min} \le 0; \quad \left(for\, g = 1,...,G\right), \\ t_g - t_{\max} \le 0; \quad \left(for\, g = 1,...,G\right). \end{cases} \tag{10.b-d}$$

The above constrained mathematical programming problem can be solved by the use of a modified SIMP algorithm (Lógó[12]).

Since the mathematical nature of the problem (10) is similar to a classical topology optimization problem (Lógó[10]) all the mathematical statements concerning convexity and differentiability are valid too (Rozvany [19], Lógó [10, 12]). The penalization of the ground element thicknesses t_g results in a more distinct material distribution indicating material or no material. Due to this penalization the optimization problem is non-unique in some sense, but the method is widely applied in engineering optimization.

4 Numerical examples

4.1 Deterministic Design

In this problem a dimensionless 40x40 units square type ground structure is the object of the design (Fig.3.a.-c.).

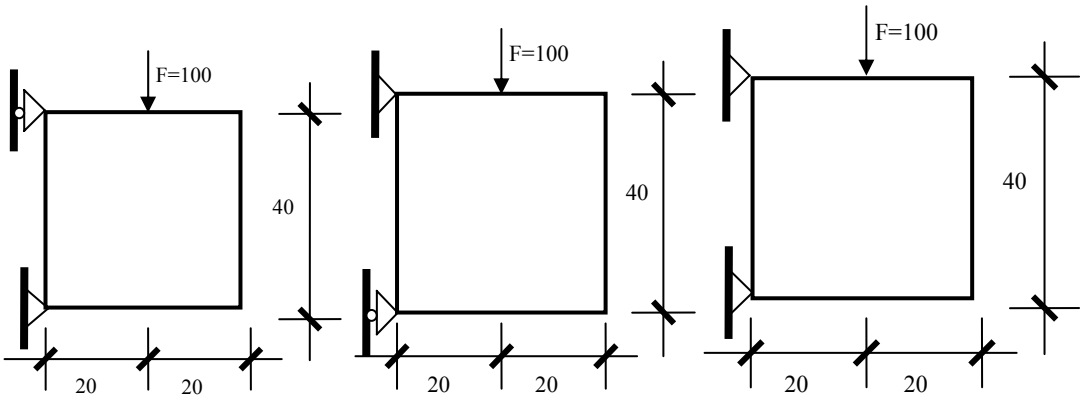

a; b; c;

Fig.3.a.-c. Square domain with different support conditions

80x80 ground elements with 2x2 sub-elements are used. (Total number of elements is 25600.) The Poisson's ratio is 0. The load is (100 units) acting in the middle of the top edge. The penalty parameter *p* was run from *p=1* to *p=1.5* with smooth increasing (increment is 0.1) and later to *p=2.5* with increment=*0.25*. The applied compliance limit is C=220000.

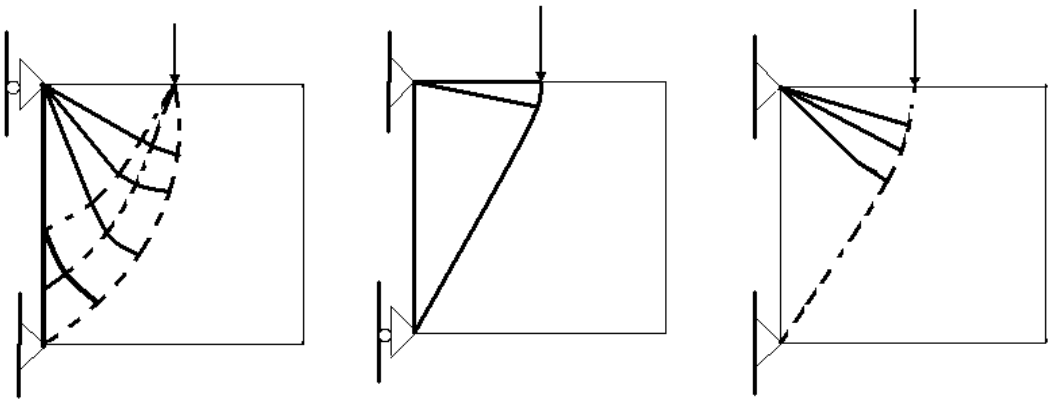

a; b; c;

Fig.4.a.-c. Possible exact analytical solutions

The possible exact solution can be seen in Fig. 4.a.-c. (Lógó [10]). The numerical optimal topologies can be seen in Figs.5.a-c., respectively. They are in good agreement with the analytical solutions.

Due to the difference of the displacement boundary conditions the optimal topologies are fundamentally different.

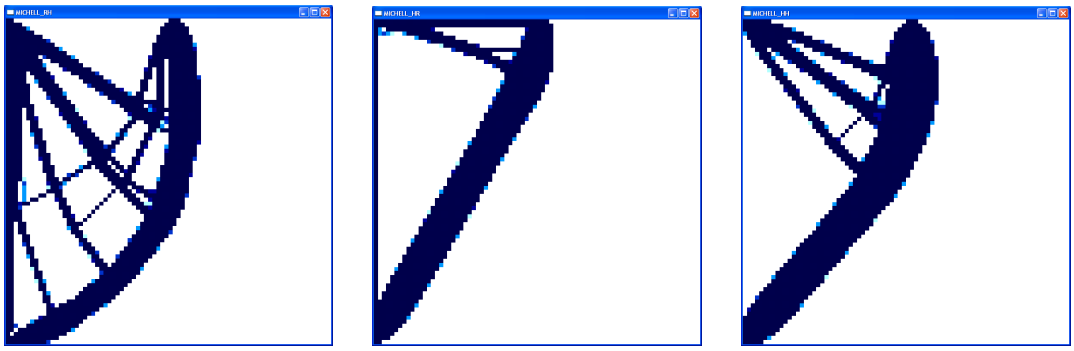

a; Roller and hinge b; Hinge and roller c; Hinge and hinge

Fig.5.a.-c. Numerical solutions for square domain

4.2 Probabilistic Design

As it was indicated earlier in the case of stochastic topology optimization the point of applications of the loads are random variables. They follow a normal distribution. The simplified simulation is based on seven base points of the loads.

The assumed probability is given by $q = 0.75$. The same compliance limit is applied (C=220000). The modifications and the termination criteria of the penalty parameter are the same as they are in the deterministic examples.

a; Roller and hinge b; Hinge and roller c; Hinge and hinge

Fig.6.a.-c. Numerical solutions for square domain

5 Conclusion

A numerical procedure was elaborated for topology optimization in the case of uncertain load positions. The parametric studies confirm that the method is suitable for numerical calculation. The computational times are not significant. The uncertainties can modify the deterministically obtained optimal topologies. The optimal structure is thinner than the deterministic one.

Acknowledgements

The present study was supported by the Hungarian National Scientific and Research Foundation (OTKA) (grant K 81185). This work is connected to the scientific program of the "Development of quality-oriented and harmonized R+D+I strategy and functional model at BME" project. This project is supported by the New Hungary Development Plan (Project ID: TÁMOP-4.2.1/B-09/1/KMR-2010-0002).

References

[1] A. Asadpoure, J.K. Guest, T. Igusa, "Structural topology optimization considering correlated uncertainties in elastic modulus", in Proceedings of the 51st AIAA/ ASME/ASCE/AHS/ASC Structures, Structural Dynamics and Materials Conference, 2010-2943, 2010.

[2] A. Asadpoure, M. Tootkaboni, J.K. Guest, "Robust topology optimization of structures with uncertainties in stiffness - Application to truss structures", Computers and Structures, 89(11-12), 1131-1141, 2011.

[3] M.P. Bendsoe and O. Sigmund, "Topology Optimization: Theory, Methods and Applications", Springer-Verlag, Berlin, 2003.

[4] B.Y. Duan, A.B. Templeman, J.J. Chen, "Entropy-based method for topological optimization of truss structures", Computers and Structures, 75(5), 539-550, 2000.

[5] P.D. Dunning, H.A. Kim, G. Mullineux, "Introducing uncertainty in direction of loading for topology optimization", 51st AIAA/ASME/ASCE/AHS/ASC Structures, Structural Dynamics and Materials Conference, Orlando, USA, 2010.

[6] P.D. Dunning, H.A. Kim, G. Mullineux, "Introducing Loading Uncertainty in Topology Optimization", AIAA Journal, 49(4), 760-768, 2011.

[7] J.K. Guest, T. Igusa, "Structural optimization under uncertain loads and nodal locations", Comp. Meth. Appl. Mech. Eng., 198, 116-124, 2008.

[8] M. Jalalpour, T. Igusa, J.K. Guest, "Optimal design of trusses with geometric imperfections: Accounting for global instability", International Journal of Solids and Structures, 48(21), 3011-3019, 2011.

[9] S. Kataoka, "A Stochastic Programming Model", Econometria, 31, (1-2), 181-196, 1963.

[10] J. Lógó, "New Type of Optimal Topologies by Iterative Method", Mechanics Based Design of Structures and Machines, 33, 2, 149-172, 2005.

[11] J. Lógó, M. Ghaemi and A. Vásárhelyi, "Stochastic compliance constrained topology optimization based on optimality criteria method", Periodica Polytechnica-Civil Engineering, 51, 2, 5-10, 2007.

[12] J. Lógó "New Type of Optimality Criteria Method in Case of Probabilistic Loading Conditions", Mechanics Based Design of Structures and Machines, 35, 2, 147-162, 2007.

[13] J. Lógó, M. Ghaemi and M. Movahedi Rad "Optimal topologies in case of probabilistic loading: The influence of load correlation", Mechanics Based Design of Structures and Machines, 37, 3, 327-348, 2009.

[14] J. Lógó, D.B. Merczel, L. Nagy, "On Optimal Topologies in Case of Uncertain Load Positions", B.H.V. Topping, Y. Tsompanakis (eds), Proceedings of the Thirteenth International Conference on Civil, Structural and Environmental Engineering Computing, Chania, Greece, Edinburgh: Civil-Comp Press, 92, 1-12, 2011.
[15] K. Marti, G. Stöckl, "Optimal (Topology) Design Under Stochastic Uncertainty", in Safety and Reliability, 2, G.I. Schüller, P. Kafka (eds), Rotterdam-Brookfield, Balkema, 1597-1602, 1999.
[16] K. Marti, G. Stöckl, "Topology and Geometry Optimization under Stochastic Uncertainty", in Numerical Methods of Uncertainties, Proceedings EUROMECH 405 Colloquium, P. Level et al. (eds), Presses Universitaires Valenciennes, Valenciennes, 55-63, 2000.
[17] A. Prékopa, "Stochastic Programming", Akadémia Kiadó and Kluwer, Budapest, Dordrecht. 1995.
[18] M.P. Rossow, J.E. Taylor, "A Finite Element Method for the Optimal Design of Variable Thickness Sheets", J. AIAA, 11, 1566-1569, 1973.
[19] G.I.N. Rozvany, "Optimization in Structural Mechanics", CISM Courses and Lectures Notes 374, Springer-Verlag, Wien, New York, 1997.
[20] T. Sokół and T. Lewinski, "On the solution of the three forces problem and its application in optimal designing of a class of symmetric plane frameworks of least weight", Structural and Multidisciplinary Optimization, 42, 835–853, 2010.