Paper 280

Proceedings of the Eleventh International Conference
on Computational Structures Technology,
B.H.V. Topping, (Editor),
Civil-Comp Press, Stirlingshire, Scotland

Placement of Fibre Reinforced Polymer Provision in No-Tension Vaults using the Vault Inequality System

A. Baratta and O. Corbi
Department of Structural Engineering
University of Naples "Federico II", Italy

Abstract

In this paper, starting from the theoretical background previously developed by the authors concerning the statics of masonry vaults and aimed at the selection of families of load shapes equilibrated by sets of admissible solutions, a strategy is outlined for identifying the areas of the vault to be reinforced with FRP provisions. As shown in the numerical investigation, higher intensities of the stress state are then allowed by the introduction of the reinforcement and the local relaxation of some of the constraints of the problem is possible.

Keywords: composites, constraint relaxation, masonry vaults, reinforcement.

1 Introduction

Approaches to the study of masonry constructions often refer to the No Tension assumption (for bibliography by the authors one may refer to [1]-[14]).
The analysis of masonry constructions still represent a very open research stream because of the complexity of the behaviour of the basic material and of the geometry (in particular in case of vaulted surfaces of generic shape) and its possible applications for the forecasting and protection of monumental buildings, also by means of dynamic control [15]-[18], especially useful in the absence of the environmental forecast [19]-[20].
The paper focuses on the possibility of identifying the regions of a masonry vault to be equipped with FRP reinforcement starting from the premise that the solution of the problem of the NT vault under assigned loads may be searched for, as shown by the authors in some previous papers [13,14], after identifying the set of admissible solutions relevant to specific load families.
The presence of the reinforcement allows some local relaxing of some of the NT admissibility constraints governing the problem.

2 The Vault Inequality System

Let consider a vault with $z = z_1(x,y)$ and $z = z_2(x,y)$ $[z_1(x,y) \le z_2(x,y)]$ (the z-axis is directed downward) the surfaces identifying the extrados upper and intrados lower profiles of the vault respectively, subject to purely vertical downward load, with $\boldsymbol{X}$ the plant of the vault, i.e. the projection of the middle surface on the <x,y> plane.
Let $z = z(x,y)$ be any surface included in between the intrados and the extrados surfaces $z_1(x,y)$ and $z_2(x,y)$, and $\bar{p}_z(x,y) \ge 0 \;\; \forall (x,y) \in \boldsymbol{X}$ be the downward vertical load per unit area on the horizontal <x,y> plane.
It has been proved in [14] that a class of solutions of the No-Tension vault equilibrium under the assigned load can be obtained by solving the following Vault Inequality System (*VIS*)

$$\begin{cases} H_z(x,y) = z_{,xx}(x,y) z_{,yy}(x,y) - \left[z_{,xy}(x,y)\right]^2 = \dfrac{\bar{p}_z(x,y)}{Q} \ge 0 \\ z_{,xx}(x,y) \ge 0 \;\; ; \;\; z_{,yy}(x,y) \ge 0 \\ z_1(x,y) \le z(x,y) \le z_2(x,y) \end{cases} \qquad \forall (x,y) \in \boldsymbol{X} \qquad (1)$$

where $H_z(x,y)$ denotes the Hessian determinant of the z-function and Q represents any positive real parameter i.e. the *boundary thrust* (dimensionally, a force), and, in the subscript position, the variables preceded by a comma denote derivation with respect to these variables.
The first two rows in Equations (1) express the condition for the convexity of the function z(x,y), and hence of the membrane force surface (see e.g. Rockafellar, 1970 [21]; Roberts and Varberg, 1973 [22]). Equation (1) will be referred to in the following as the *Vault Inequality System (VIS)*.

3 The Case of the Sail Vault

3.1 Equilibrium Conditions

Let consider a sail vault with a rectangular plant under the load $\bar{p}_z(x,y)$ assumed with the shape of the type of the self-weight of the vault, that is to say symmetric with respect to the x and y axes like the geometry of the vault

$$\bar{p}_z(x,y) = p_o + p_x x^2 + p_y y^2 + p_{xy} x^2 y^2 \qquad (2)$$

with p_o, p_x, p_y and p_{xy} suitably defined constants, with $p_o p_{xy} = p_x p_y$.

After selecting an expression of the membrane surface that is expected to be symmetric as well, in the form

$$z(x,y) = K + \frac{A}{2}x^2 + \frac{B}{12}x^4 + \frac{C}{2}y^2 + \frac{D}{12}y^4 \tag{3}$$

Where K, A, B, C, D denote five unknown constants to be determined after the conditions governing the problem.

By imposing equilibrium of the membrane surface with the applied load (the first in Equations (1)), one gets

$$\bar{p}_z(x,y) = Q\left[AC + BCx^2 + ADy^2 + BDx^2y^2\right]$$
$$\Rightarrow \begin{cases} QAC = p_o \\ QBC = p_x \\ QAD = p_y \\ QBD = p_{xy} \end{cases} \Rightarrow \begin{cases} \dfrac{A}{B} = \dfrac{p_o}{p_x} = \dfrac{p_y}{p_{xy}} \\ \dfrac{C}{D} = \dfrac{p_o}{p_y} = \dfrac{p_x}{p_{xy}} \end{cases} \tag{4}$$

That represent four equations in five unknowns.

The NT admissibility conditions should be checked by considering the values of the function z(x,y) at the origin of the axes and on the perimeter tympans.

3.2 The minimum thrust membrane

For example by considering the case when the membrane surface is tangent to the extrados profile at the origin point (0,0), after some developments, one may identify the three following cases with the relevant solutions:

Case 1):

$$\begin{cases} z(0,0) = z_1(0,0) \\ z(x_1,0) = z_2(x_1,0) \\ z(0,y_1) = z_2(0,y_1) \end{cases}$$

$$\Rightarrow \begin{cases} K = z_{c1} \\ A = 12\dfrac{z_2(x_1,0) - K}{6p_o x_1^2 + p_x x_1^4} p_o, \quad B = 12\dfrac{z_2(x_1,0) - K}{6p_o x_1^2 + p_x x_1^4} p_x \\ C = 12\dfrac{z_2(0,y_1) - K}{6p_x y_1^2 + p_{xy} y_1^4} p_x, \quad D = 12\dfrac{z_2(0,y_1) - K}{6p_x y_1^2 + p_{xy} y_1^4} p_{xy} \\ Q = \dfrac{p_o}{AC} = \dfrac{1}{144p_x} \dfrac{\left[6p_o x_1^2 + p_x x_1^4\right]\left[6p_x y_1^2 + p_{xy} y_1^4\right]}{\left[z_2(x_1,0) - K\right]\left[z_2(0,y_1) - K\right]} \end{cases} \tag{5}$$

The solution in the case 1) is valid only if

$$\begin{aligned} z(x_1,y_1) \le z_2(x_1,y_1)\} &\Rightarrow K + \frac{A}{2}x_1^2 + \frac{B}{12}x_1^4 + \frac{C}{2}y_1^2 + \frac{D}{12}y_1^4 \le z_2(x_1,y_1) \\ z(x_1,y_1) \le z_2(x_1,y_1)\} &\Rightarrow z_2(x_1,0) + z_2(0,y_1) \le z_2(x_1,y_1) + K \end{aligned} \tag{6}$$

Case 2):

$$\begin{cases} z(0,0) = z_1(0,0) \\ z(0,y_1) = z_2(0,y_1) \\ z(x_1,y_1) = z_2(x_1,y_1) \end{cases}$$

$$\Rightarrow \begin{cases} K = z_{c1} \\ A = 12\dfrac{z_2(x_1,y_1) - z_2(0,y_1)}{6p_o x_1^2 + p_x x_1^4}p_o, \quad B = 12\dfrac{z_2(x_1,y_1) - z_2(0,y_1)}{6p_o x_1^2 + p_x x_1^4}p_x \\ C = 12\dfrac{z_2(0,y_1) - K}{6p_o y_1^2 + p_y y_1^4}p_o, \quad D = 12\dfrac{z_2(0,y_1) - K}{6p_o y_1^2 + p_y y_1^4}p_y \\ Q = \dfrac{p_o}{AC} = \dfrac{1}{144p_o}\dfrac{\left(6p_o x_1^2 + p_x x_1^4\right)\left(6p_o y_1^2 + p_y y_1^4\right)}{[z_2(x_1,y_1) - z_2(0,y_1)][z_2(0,y_1) - K]} \end{cases} \tag{7}$$

The solution in the case 2) is valid only if

$$z(x_1,0) \le z_2(x_1,0) \rightarrow K + \frac{A}{2}x_1^2 + \frac{B}{12}x_1^4 \le z_2(x_1,0) \tag{8}$$

Case 3):

$$\begin{cases} z(0,0) = z_1(0,0) \\ z(x_1,0) = z_2(x_1,0) \\ z(x_1,y_1) = z_2(x_1,y_1) \end{cases}$$

$$\Rightarrow \begin{cases} K = z_{c1} \\ A = 12\dfrac{z_2(x_1,0) - K}{6p_o x_1^2 + p_x x_1^4}p_o, \quad B = 12\dfrac{z_2(x_1,0) - K}{6p_o x_1^2 + p_x x_1^4}p_x \\ C = 12\dfrac{z_2(x_1,y_1) - z_2(x_1,0)}{6p_o y_1^2 + p_y y_1^4}p_o, \quad D = 12\dfrac{z_2(x_1,y_1) - z_2(x_1,0)}{6p_o y_1^2 + p_y y_1^4}p_y \\ Q = \dfrac{p_o}{AC} = \dfrac{1}{144p_o}\dfrac{\left(6p_o x_1^2 + p_x x_1^4\right)\left(6p_o y_1^2 + p_y y_1^4\right)}{[z_2(x_1,y_1) - z_2(x_1,0)][z_2(x_1,0) - K]} \end{cases} \tag{9}$$

The solution in the case 3) is valid only if

$$z(0,y_1) \le z_2(0,y_1) \rightarrow K + \frac{C}{2} y_1^2 + \frac{D}{12} y_1^4 \le z_2(0,y_1) \tag{10}$$

Since one has considered the situation when the membrane surface of the vault under the applied load touches the extrados surface at its keystone it represents the case when the minimum thrust occurs.

Actually, when introducing a reinforcement at the intrados of the vault, the thrust may be reduced since the constraint relevant to the membrane surface $z_1(x,y) \le z(x,y) \quad \forall (x,y) \in \boldsymbol{X}$ (the z-axis is downward directed), which requires that the membrane itself is contained in the upper profile, is locally relaxed. Therefore the reinforcement allows the membrane to come out from the vault thickness at the extrados. This circumstance implies that the parameter K may be smaller and also the thrust Q may decrease as the area of the intrados reinforcement is increased.

4 The Numerical Investigation

Let consider the case when the vault is characterized by its plant edge co-ordinates x_1, x_2, y_1 and y_2 , and a parabolic shape with $z_1(x,y)$ and $z_2(x,y)$ the extrados and intrados profiles, given as follows

$$x_1 = -5 \ ; \ x_2 = 5 \ ; \ y_1 = -3 \ ; \ y_2 = 3 \ ; \quad z_{c1} = 1.0 \ ; \ z_{c2} = 1.5$$

$$z_1(x,y) = z_{c1} + C_x \frac{x^2}{(x_2 - x_1)^2} + C_y \frac{y^2}{(y_2 - y_1)^2} \tag{11}$$

$$z_2(x,y) = z_{c2} + C_x \frac{x^2}{(x_2 - x_1)^2} + C_y \frac{y^2}{(y_2 - y_1)^2}$$

According to what developed in the previous Section, the membrane surface z(x,y) relevant to the minimum thrust is embedded in the vault profile, as shown in Figure 1, where the cross section of the vault and of the membrane surface relevant to the minimum thrust along the vertical diagonal plane is reported. Actually the adoption of some FRP reinforcement to be introduced at the intrados of the vault is such that the thrust may be still reduced and the membrane surface is allowed to locally overpass the extrados vault profile.

In the following four different cases are considered relevant to four different values of the thrust Q, and the regions of the vault where the reinforcement is to be applied are identified.

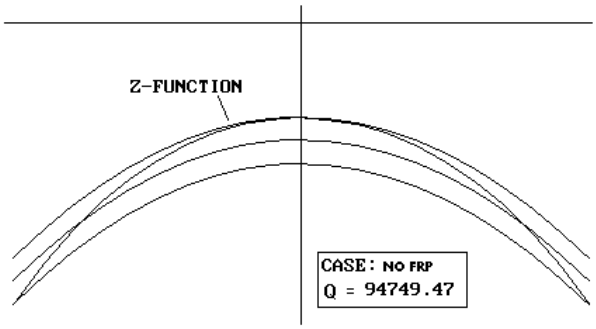

Figure 1: Cross section along the diagonal vertical plane of the vault and of the z-function relevant to the minimum thrust situation.

In Figures 2-5 the cross-sections along the vertical diagonal plane of the vault and of the membrane surfaces related to the four cases are depicted, whilst the trace of the areas to be reinforced projected on the vault plant for the four cases are reported in Figures 6-9.

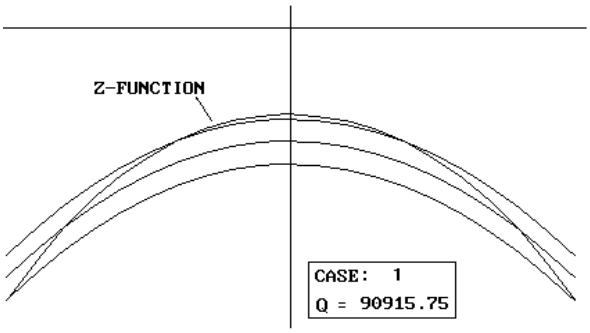

Figure 2: Cross section along the vertical diagonal plane of the vault and of the z-functions for the first case when the membrane surface overpasses the extrados profile of the vault.

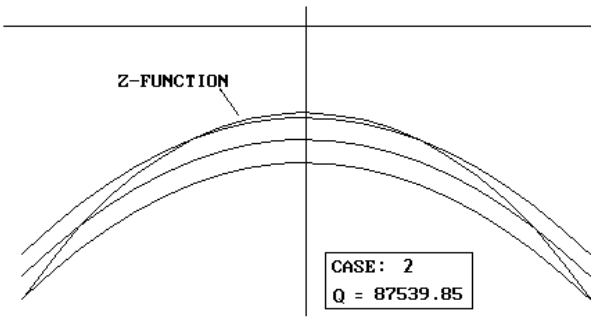

Figure 3: Cross section along the vertical diagonal plane of the vault and of the z-functions for the second case when the membrane surface overpasses the extrados profile of the vault.

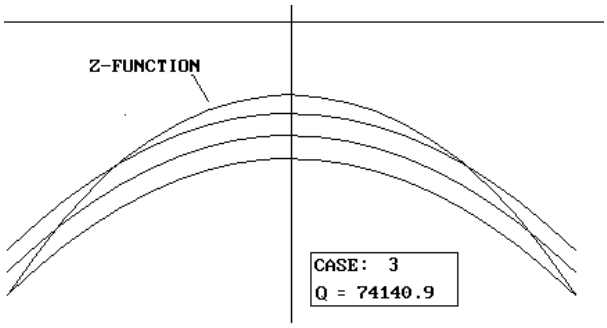

Figure 4: Cross section along the vertical diagonal plane of the vault and of the z-functions for the third case when the membrane surface overpasses the extrados profile of the vault.

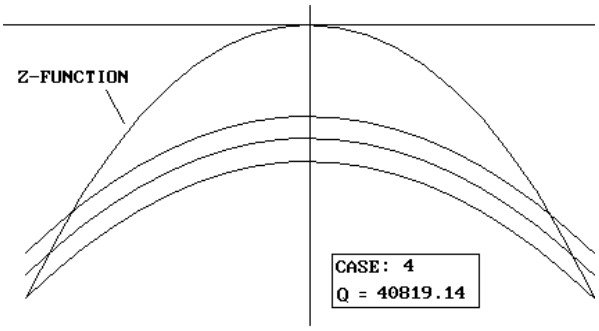

Figure 5: Cross section along the vertical diagonal plane of the vault and of the z-functions for the fourth case when the membrane surface overpasses the extrados profile of the vault.

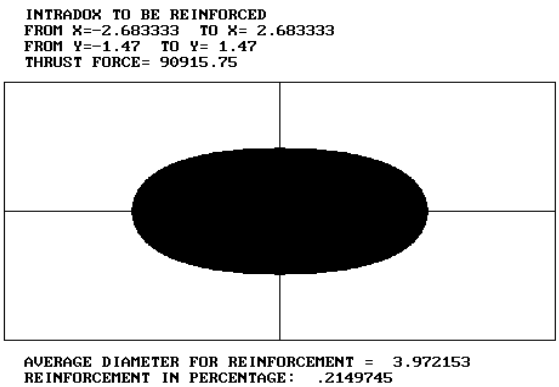

Figure 6: Region of the vault to be reinforced at the intrados in the first case when the membrane surface overpasses the extrados profile of the vault.

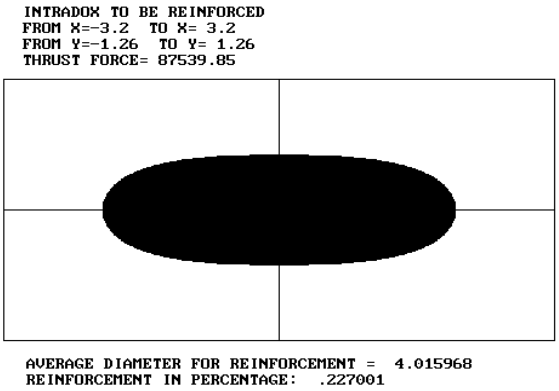

Figure 7: Region of the vault to be reinforced at the intrados in the second case when the membrane surface overpasses the extrados profile of the vault.

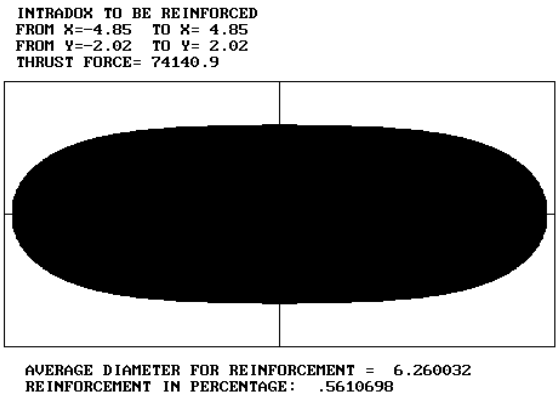

Figure 8: Region of the vault to be reinforced at the intrados in the third case when the membrane surface overpasses the extrados profile of the vault.

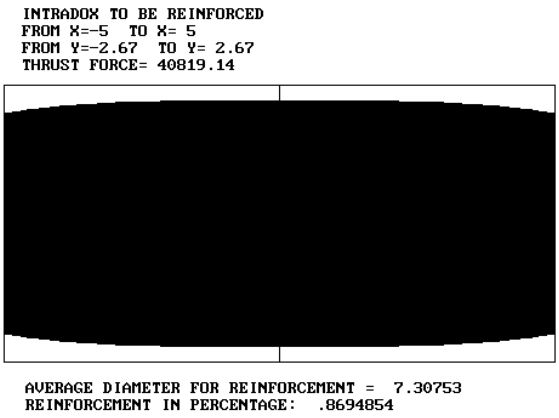

Figure 9: Region of the vault to be reinforced at the intrados in the fourth case when the membrane surface overpasses the extrados profile of the vault.

5 Conclusions

The approach proposed in the paper shows that some easy application of the theoretical set up proposed by the authors for the treatment of masonry vaults modelled under the NT assumption may be performed, also with the specific objective of identifying the regions of the vault to be reinforced.
By this approach, as shown in the investigation, one may evaluate the extension and the position of the areas where the reinforcement should be applied according to the expected collapse mechanism of the vault and to the desired reduction of the thrust at given locations.

Acknowledgements

The present research has been performed thanks to the financial support of the Italian Ministry of University and Research within a PRIN project and by the Department of Civil Protection of the Italian Government through the ReLuis pool (convention No.823 signed 24/09/2009, Thematic Area 2-Research Line 3-Task 1).

References

[1] A. Baratta, I. Corbi "Iterative Procedure in No-Tension 2D Problems: theoretical solution and experimental applications". In: G.C.Sih & L.Nobile Eds., “Restoration, Recycling and Rejuvenation Technology for Engineering and Architecture Application”, 2004, pp. 67-75, Aracne Ed, Bologna. ISBN 88-7999-765-3

[2] A. Baratta, I. Corbi “Plane of Elastic Non-Resisting Tension Material under Foundation Structures”. International Journal for Numerical and Analytical Methods in Geomechanics, 2004, vol. 28, pp. 531-542, J. Wiley & Sons Ltd. ISSN 0363-9061, DOI: 10.1002/nag.349

[3] A. Baratta, I. Corbi “Spatial foundation structures over no-tension soil”. International Journal for Numerical and Analytical Methods in Geomechanics, 2005, vol. 29, pp. 1363-1386, Wiley Ed. ISSN: 03639061, DOI: 10.1002/nag.464

[4] A. Baratta, I. Corbi, "On the Statics of Masonry Helical Staircases", in B.H.V. Topping, Y. Tsompanakis, (Editors), "Proceedings of the Thirteenth International Conference on Civil, Structural and Environmental Engineering Computing", Civil-Comp Press, Stirlingshire, UK, Crete;6 -9 September 2011, Paper 59, 2011. 16p, ISBN: 978-190508845-4doi:10.4203/ccp.96.59

[5] A. Baratta, O. Corbi, “On Variational Approaches in NRT Continua”. Intern. Journal of Solids and Structures, Elsevier Science, 2005. 42: 5307-5321. ISSN: 0020-7683. doi:10.1016/j.ijsolstr.2005.03.075

[6] A. Baratta, O. Corbi “The No Tension Model for the Analysis of Masonry-Like Structures Strengthened by Fiber Reinforced Polymers”. Intern. Journal

of Masonry International, British Masonry Society. 2003, Vol.16 No.3: 89-98. ISSN 0950-2289

[7] A. Baratta, O. Corbi, "Relationships of L.A. Theorems for NRT Structures by Means of Duality". Intern. Journal of Theoretical and Applied Fracture Mechanics, Elsevier Science. 2005, Vol. 44, pp. 261-274. ISSN: 0167-8442. Doi:10.1016/j.tafmec.2005.09.008

[8] A. Baratta, O. Corbi, "Stress Analysis of Masonry Vaults and Static Efficacy of FRP Repairs". Intern. Journal of Solids and Structures, Elsevier Science. 2007, Vol.44, No.24, pp. 8028-8056. ISSN: 0020-7683. doi.10.1016/j.ijsolstr.2007.05.024

[9] A. Baratta, O. Corbi, "Duality in Non-Linear Programming for Limit Analysis of NRT Bodies". Structural Engineering and Mechanics, An Intern. Journal. Technopress. 2007, Vol. 26, No. 1, pp. 15-30.

[10] A. Baratta, "Strength capacity of No Tension portal arch-frame under combined seismic and ash loads" Journal of Volcanological and Geothermal Research, 2004, V 133, N 1-4, 30 May. (2004), pp. 369-376, ISSN 0377-0273, DOI: 10.1016/S0377-0273(03)00408-6.

[11] A. Baratta, O. Corbi, "On the equilibrium and admissibility coupling in NT vaults of general shape" Int J Solids and Structures, 47(17), 2276-2284, 2010. ISSN: 0020-7683. Doi: 10.1016/j.ijsolstr.2010.02.024

[12] A. Baratta, O. Corbi, "An Approach to Masonry Structural Analysis by the No-Tension Assumption—Part I: Material Modeling, Theoretical Setup, and Closed Form Solutions". Applied Mechanics Reviews, ASME International. Appl. Mech. Rev., July 2010, Vol.63, Issue 4, 040802-1/17 (17 pages). ISSN 0003-6900 doi:10.1115/1.4002790

[13] A. Baratta, O. Corbi, "An Approach to Masonry Structural Analysis by the No-Tension Assumption—Part II: Load Singularities, Numerical Implementation and Applications". Applied Mechanics Reviews, ASME International.Appl. Mech. Rev., July 2010, Vol.63, Issue 4, 040803-1/21 (21 pages). ISSN 0003-6900, doi:10.1115/1.4002791

[14] A. Baratta, O. Corbi, "On the statics of No-Tension masonry-like vaults and shells: solution domains, operative treatment and numerical validation". 2011, Annals of Solid and Structural Mechanics, Volume 2, Numbers 2-4, pp. 107-122. ISSN 1867-6936, doi: 10.1007/s12356-011-0022-8

[15] A.Baratta, I. Corbi "Base isolation for steel structures on stiff and soft soil" Proceedings of the 5th International Conference on Behaviour of Steel Structures in Seismic Areas - Stessa 2006 2006,Yokohama;14 August 2006through17 August 2006; Pages 665-670, ISBN: 0415408245;978-041540824-0

[16] A. Baratta, O. Corbi "Analysis of the Dynamics of Rigid Blocks Through the Theory of Distributions", Journal of Advances in Engineering Software, Volume 44, Issue 1 , Feb. 2012, pp. 15-25, Elsevier Science Ltd. ISSN: 0965-9978, doi:10.1016/j.advengsoft.2011.07.008

[17] A. Baratta, O. Corbi "Dynamic Response and Control of Hysteretic Structures". Intern. Journal of Simulation Modeling Practice and Theory

(SIMPAT), Elsevier Science. 2003, Vol.11: 371-385. ISSN: 1569-190X, DOI: 10.1016/S1569-190X(03)00058-3

[18] A. Baratta, I. Corbi, O. Corbi, "Rocking Motion of Rigid Blocks and their Coupling with Tuned Sloshing Dampers", in B.H.V. Topping, L.F. Costa Neves, R.C. Barros, (Editors), "Proceedings of the Twelfth International Conference on Civil, Structural and Environmental Engineering Computing", Civil-Comp Press, Stirlingshire, UK, Paper 175, 2009. ISBN 978-1-9050-88-32-4, doi:10.4203/ccp.91.175

[19] A. Baratta, I. Corbi "Epicentral Distribution of seismic sources over the territory". International Journal of Advances in Engineering Software, 2004, vol. 35, Issues 10-11, pp. 663-667, Elsevier. ISSN 0965-9978, DOI: 10.1016/j.advengsoft.2004.03.015

[20] A. Baratta, I. Corbi "Evaluation of the Hazard Density Function at the Site". International Journal of Computers & Structures, 2005, vol. 83, Issues 28-30, pp. 2503-2512, Elsevier. ISSN 0045-7949, DOI: 10.1016/j.compstruc.2005.03.038

[21] R.T. Rockafellar, "Convex Analysis". Princeton university Press, Princeton, N.J., 451, 1970.

[22] A.W. Roberts, D.E. Varberg, "Convex Functions", Academic Press, New York, pp. 300, 1973.